U.S. COAST GUARD
83
USCGC MACKINAW
WAGB 83

ICEBREAKER USCG MACKINAW (WAGB 83)

"THE QUEEN OF THE GREAT LAKES"

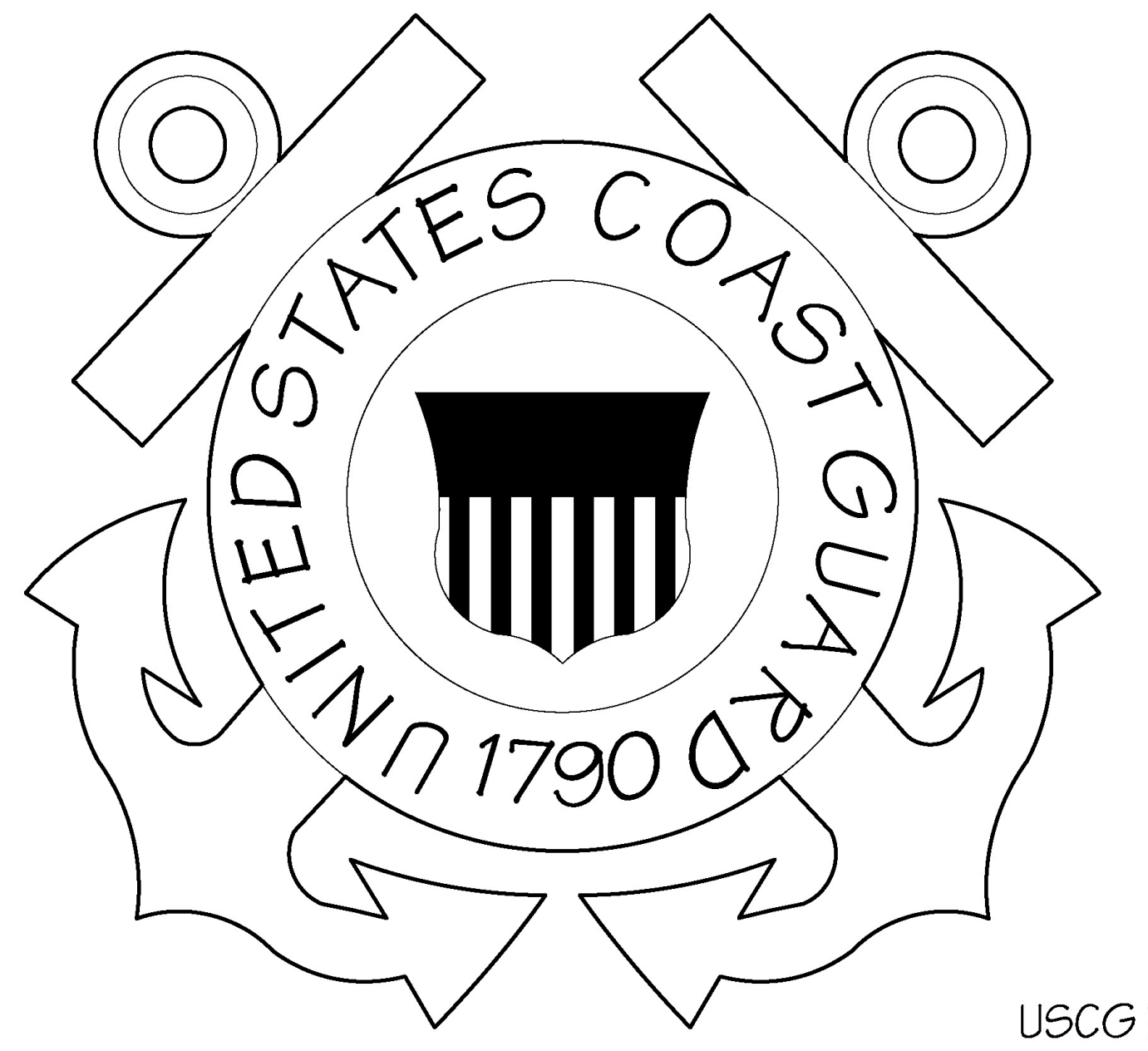
UNITED STATES COAST GUARD
1790

USCG EMBLEM

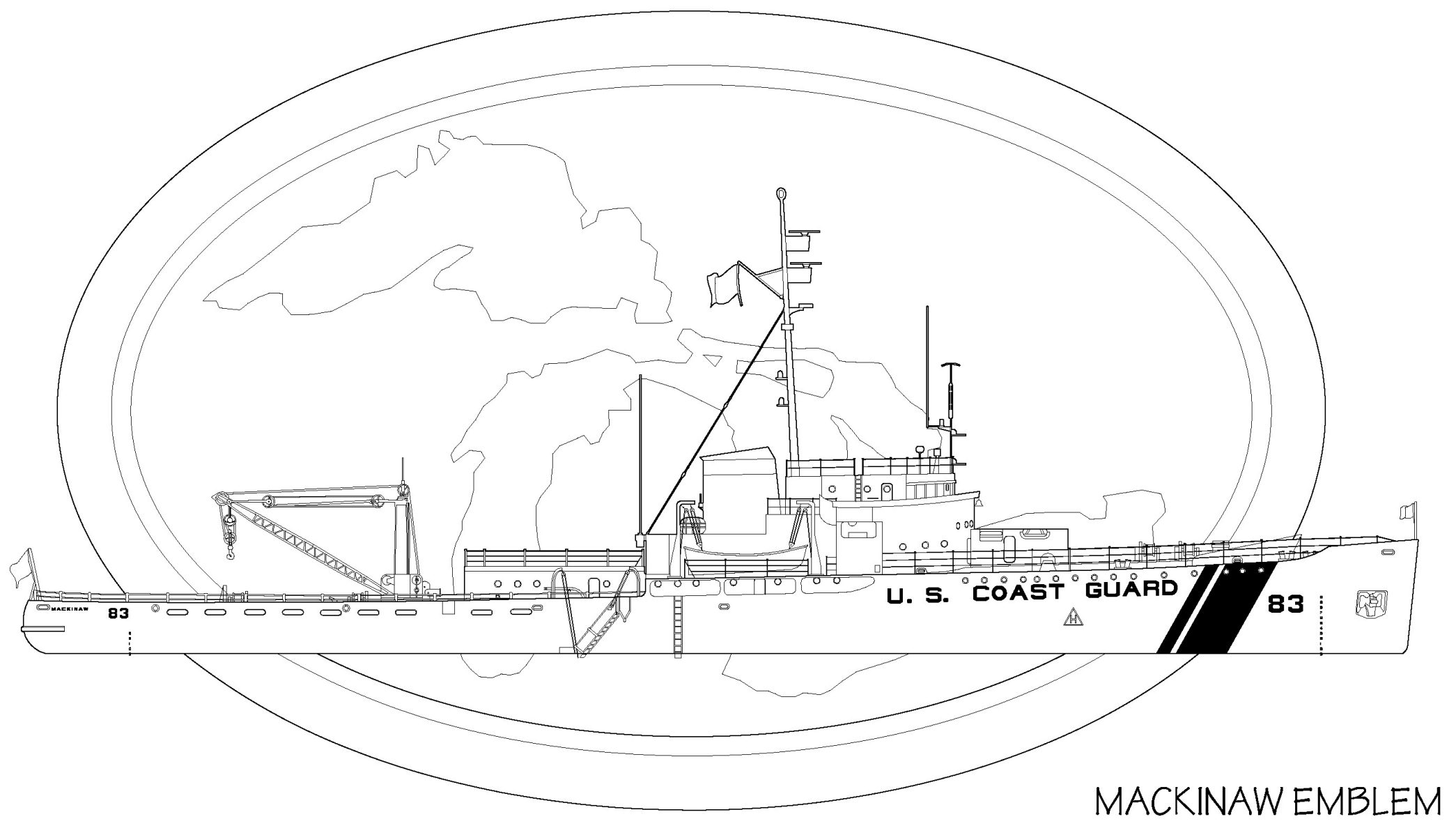
83
U. S. COAST GUARD
83

MACKINAW EMBLEM

When the United States entered into the Second World War, the U.S. Navy moved a majority of its ships to the Atlantic to counter the German U-boat threat. Two icebreakers, the *Escanaba* and *Tahoma*, were moved from the Great Lakes as a result. As war production grew in the United States, so did the need for an icebreaker that could operate on the Great Lakes year round. The war effort placed heavy demands on industry that required increases in cargo carrying raw materials to the factories during the winter months. Consequently, Congress appropriated funding for an icebreaker to operate solely on the Great Lakes.

When the *Mackinaw* was launched, she was the most powerful icebreaker in existence. She was specifically built for service on the Great Lakes and the only vessel built in her class. Her long service career, sixty-two years, made this ship a hero and an icon for the men and women who not only served on her, but also for the mariners that sailed on the Great Lakes.

Today, the *Mackinaw* is a floating museum located in Mackinaw City, Michigan (the town for which she was named after). The U.S. Coast Guard released the ship to the Icebreaker *Mackinaw* Maritime Museum in July 2006. Currently, the museum is developing exhibits for the public so they can tour the ship and glean knowledge from the *Mackinaw*'s long career.

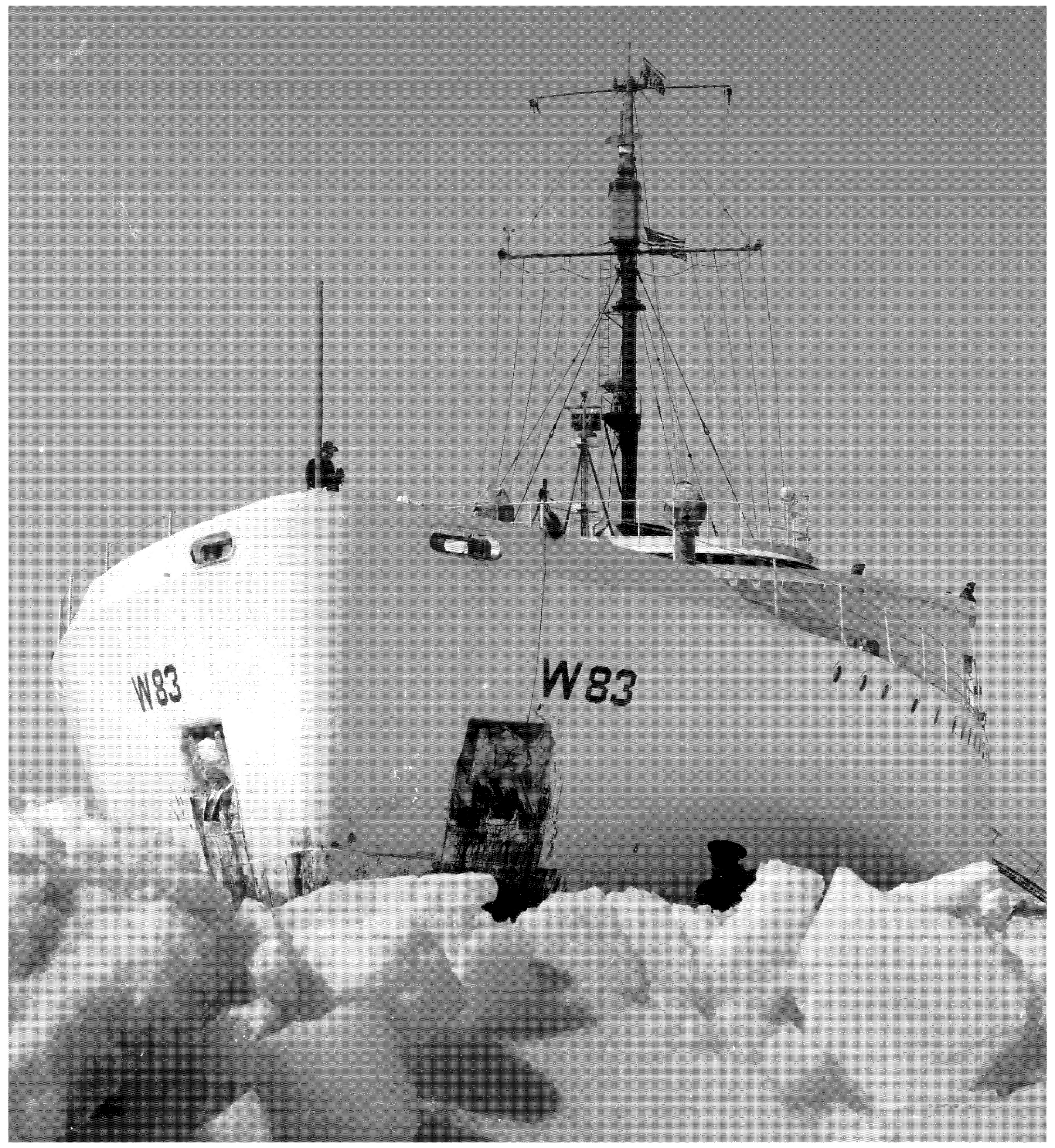

OFFICIAL USCG PHOTO: 062559-07

This project was prepared under the direction of HAER Maritime Program Coordinator, Todd Croteau and USCG Environmental Officer, Susan Hathaway. Brian Clayton, Contract Historian, prepared the historical narrative. Gregoire Holeyman, HAER Intern Architect, generated vessel drawings. Jet Lowe, HAER photographer, created large format photographs. Special thanks are given to Commander Joe McGuiness and Lieutenant Commander Lisa Mack for giving us the last tour of the Mackinaw. Their help and assistance greatly benefited our project.

The *Mackinaw* was documented during its final days with the Coast Guard in Cheboygan, MI. The vessel was to be transferred to a musuem group and relocated to Mackinaw City, MI upon being decomissioned in 2006.

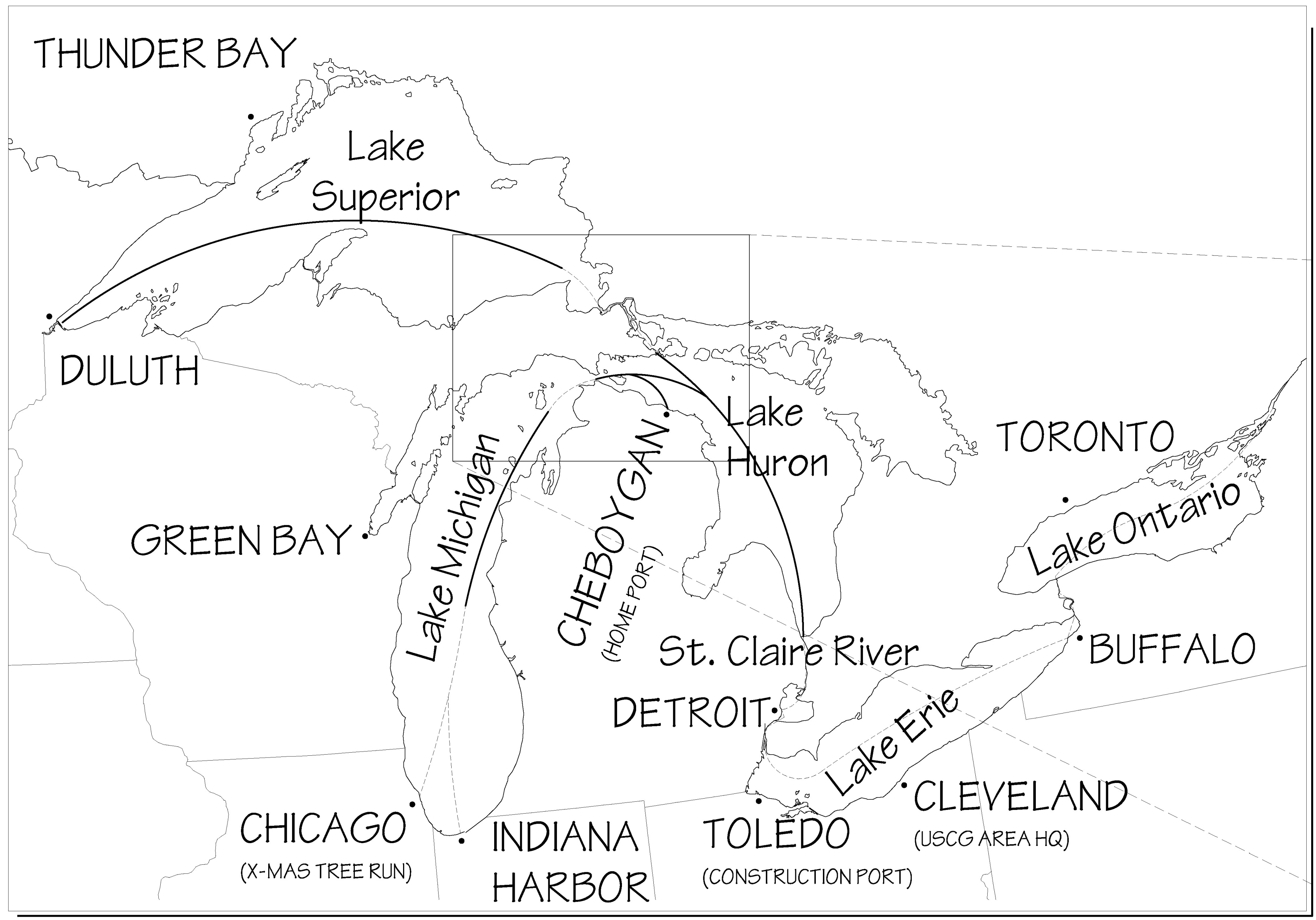
THUNDER BAY
Lake Superior
DULUTH
GREEN BAY
Lake Michigan
CHEBOYGAN (HOME PORT)
Lake Huron
TORONTO
Lake Ontario
St. Claire River
BUFFALO
DETROIT
Lake Erie
CLEVELAND (USCG AREA HQ)
CHICAGO (X-MAS TREE RUN)
INDIANA HARBOR
TOLEDO (CONSTRUCTION PORT)

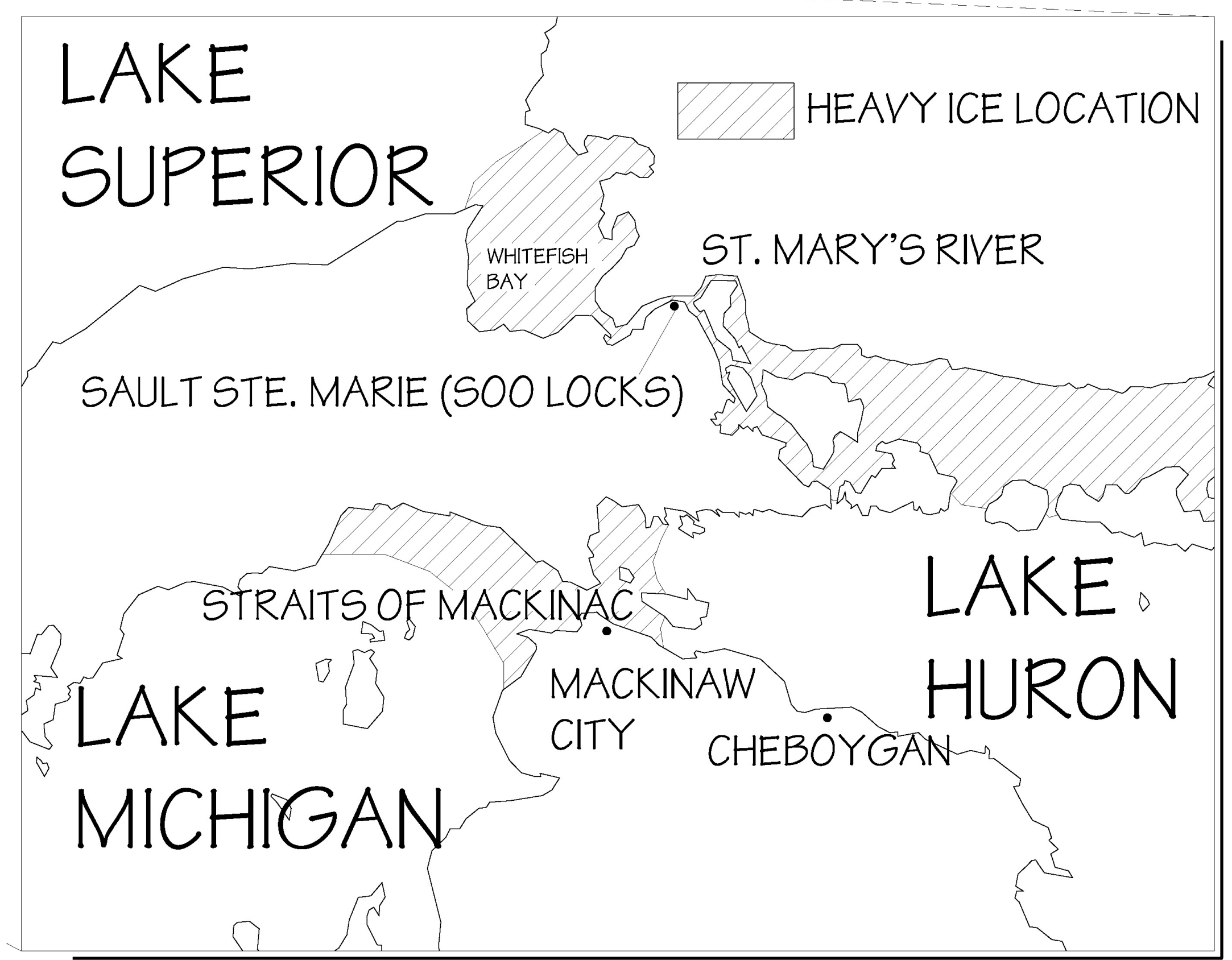
LAKE SUPERIOR
HEAVY ICE LOCATION
WHITEFISH BAY
ST. MARY'S RIVER
SAULT STE. MARIE (SOO LOCKS)
STRAITS OF MACKINAC
LAKE MICHIGAN
MACKINAW CITY
CHEBOYGAN
LAKE HURON

DETAIL MAP OF THE MACKINAW'S REGIONAL ICE BREAKING AREA

LIBRARY OF CONGRESS INDEX NUMBER

HISTORIC AMERICAN ENGINEERING RECORD
MI-121

SHEET
1 OF 11

MICHIGAN

MACKINAW (WAGB 83)
632 COAST GUARD DRIVE
CHEBOYGAN COUNTY

CHEBOYGAN

HAER MARITIME
RECORDING PROGRAM
NATIONAL PARK SERVICE
UNITED STATES DEPARTMENT OF THE INTERIOR

DELINEATED BY: GREGOIRE HOLEYMAN

SPECIFICATIONS
Length: 290 Feet
Beam: 74 Feet 5 Inches
Draft: 19 Feet 2 Inches
Displacement: 5,252 Tons

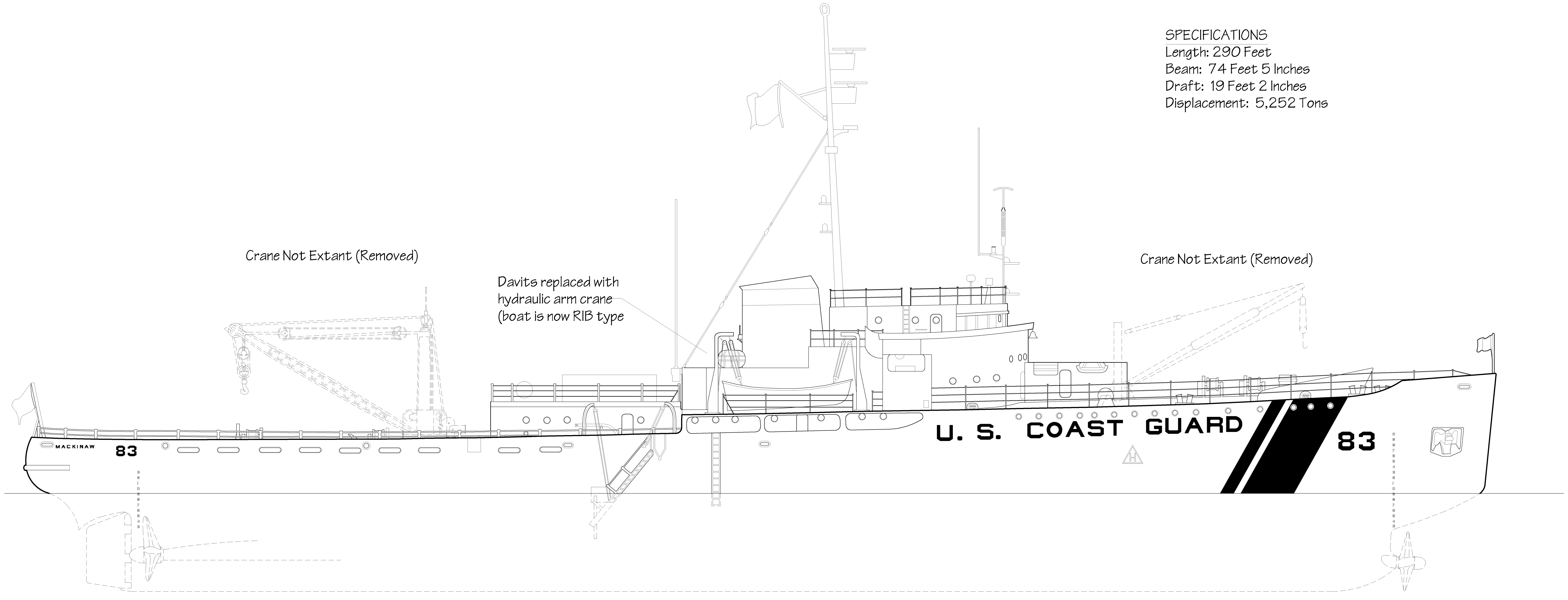
Crane Not Extant (Removed)
Davits replaced with hydraulic arm crane (boat is now RIB type
Crane Not Extant (Removed)
MACKINAW
83
U. S. COAST GUARD
83

OUTBOARD PROFILE

SEE SHEET 11 FOR DETAIL OF TOWING SYSTEM

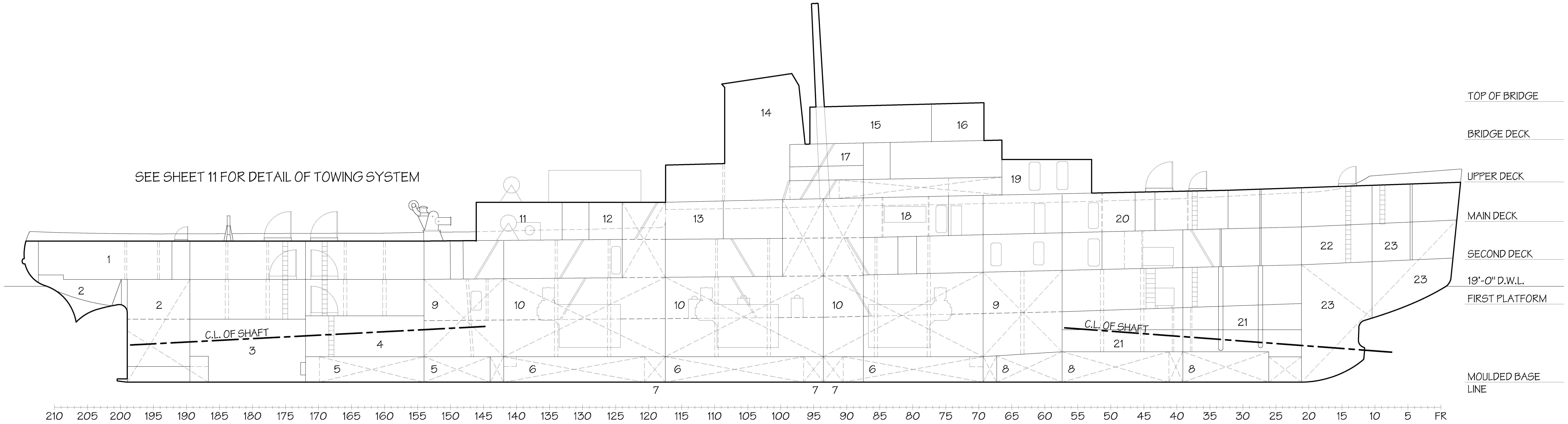
14
15
16
17
19
11
12
13
18
20
1
22
23
2
2
9
10
10
10
9
23
23
21
C.L. OF SHAFT
C.L. OF SHAFT
3
4
21
5
5
6
6
6
8
8
8
7
7 7
TOP OF BRIDGE
BRIDGE DECK
UPPER DECK
MAIN DECK
SECOND DECK
19'-0" D.W.L.
FIRST PLATFORM
MOULDED BASE LINE
210 205 200 195 190 185 180 175 170 165 160 155 150 145 140 135 130 125 120 115 110 105 100 95 90 85 80 75 70 65 60 55 50 45 40 35 30 25 20 15 10 5 FR

INBOARD PROFILE

1. STEERING GEAR ROOM
2. AFTER PEAK TRIM TANK
3. TRIM TANK
4. PUMP ROOM
5. BALLAST TANK
6. DIESEL OIL TANK
7. ICE BOX
8. POTABLE WATER TANK
9. MOTOR ROOM
10. GENERATOR ROOM
11. TOWING WINCH ROOM
12. CREWS MESS
13. TOWING MOTOR GENERATOR ROOM
14. STACK
15. CHART ROOM
16. WHEEL HOUSE
17. RADIO CENTRAL
18. GALLEY
19. WINCH ROOM
20. GYRO ROOM
21. SHAFT ALLEY
22. CHAIN LOCKER
23. FORE PEAK TRIM TANK

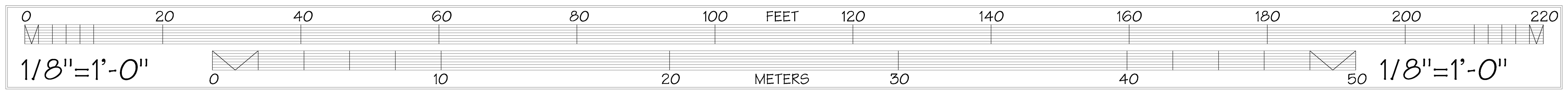
0 20 40 60 80 100 FEET 120 140 160 180 200 220
1/8"=1'-0"
0 10 20 METERS 30 40 50
1/8"=1'-0"

NOTE: DRAWINGS HAVE BEEN TRACED FROM ORIGINAL 1943 CONSTRUCTION PLANS BY THE USCG

DELINEATED BY: GREGOIRE HOLEYMAN

HAER MARITIME
RECORDING PROGRAM
NATIONAL PARK SERVICE
UNITED STATES DEPARTMENT OF THE INTERIOR

CHEBOYGAN

MACKINAW (WAGB 83)
632 COAST GUARD DRIVE
CHEBOYGAN COUNTY

MICHIGAN

SHEET
2 OF 11

HISTORIC AMERICAN
ENGINEERING RECORD
MI-121

LIBRARY OF CONGRESS
INDEX NUMBER

UPPER DECK PLANS

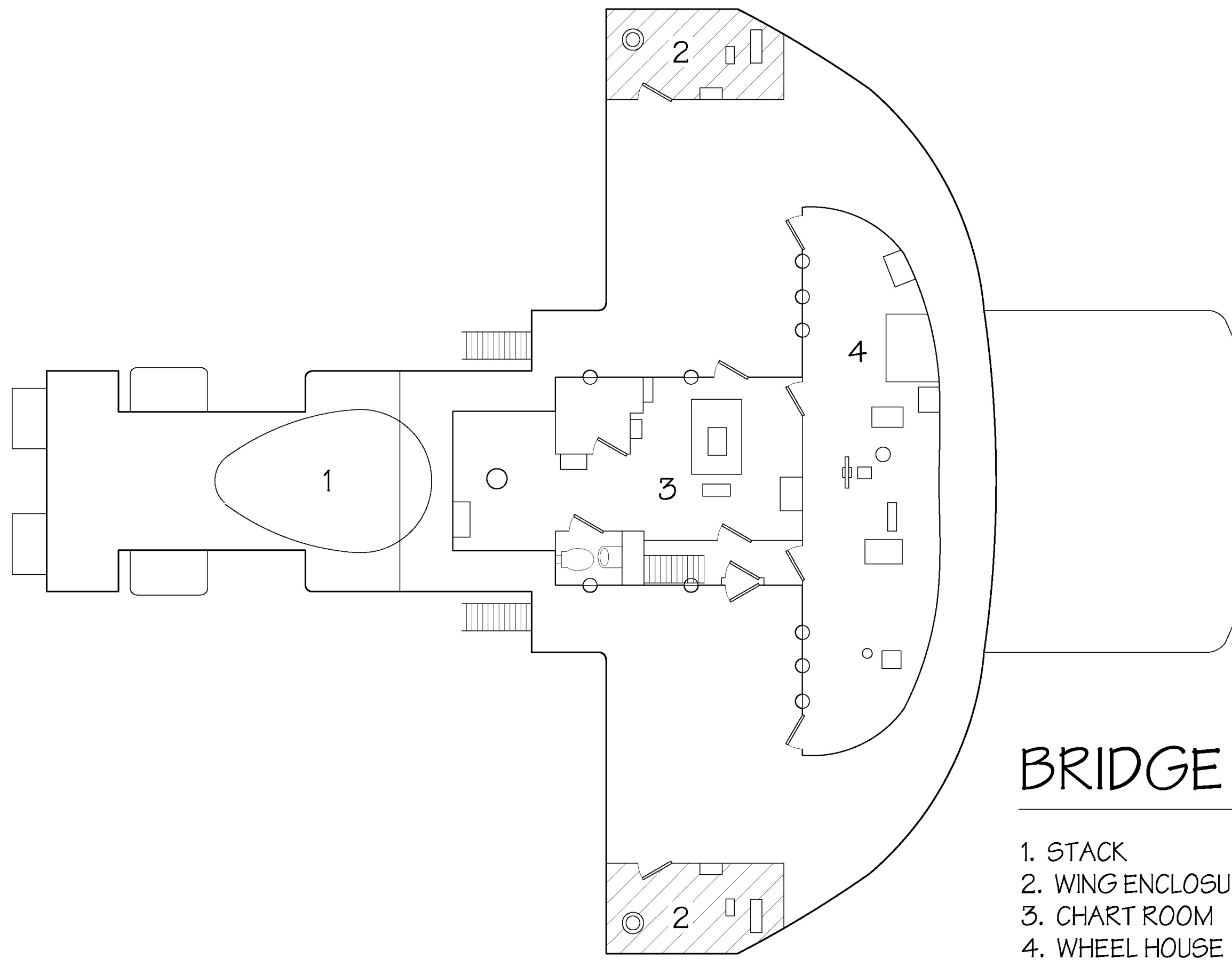

BRIDGE DECK

1. STACK
2. WING ENCLOSURE
3. CHART ROOM
4. WHEEL HOUSE

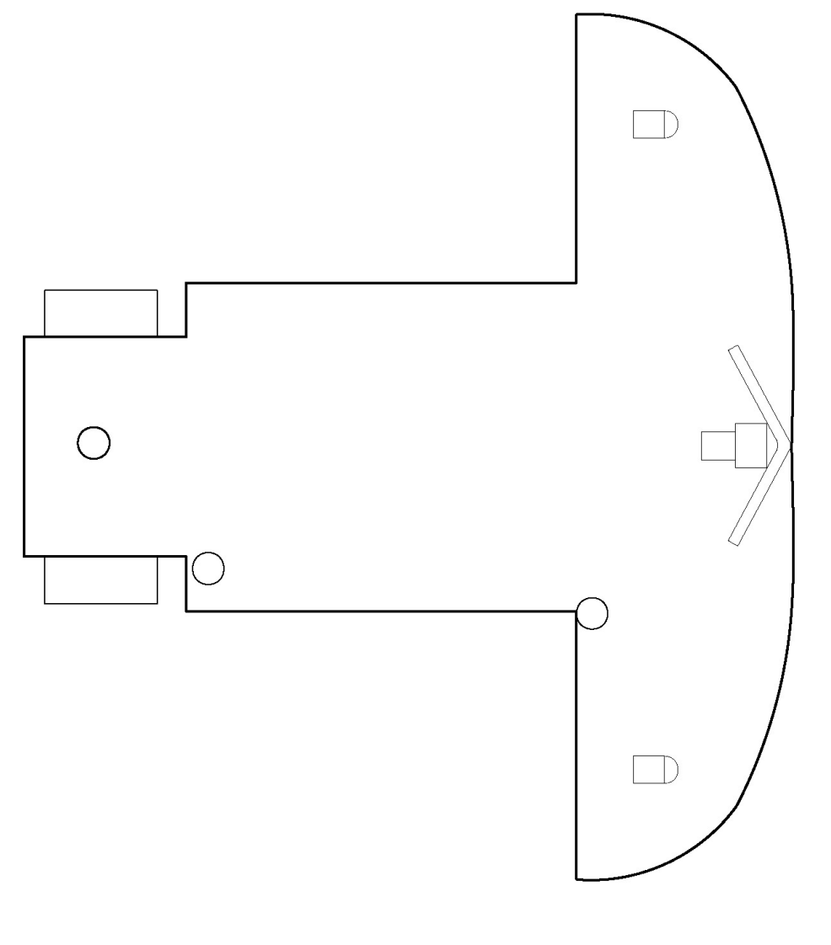

TOP OF BRIDGE

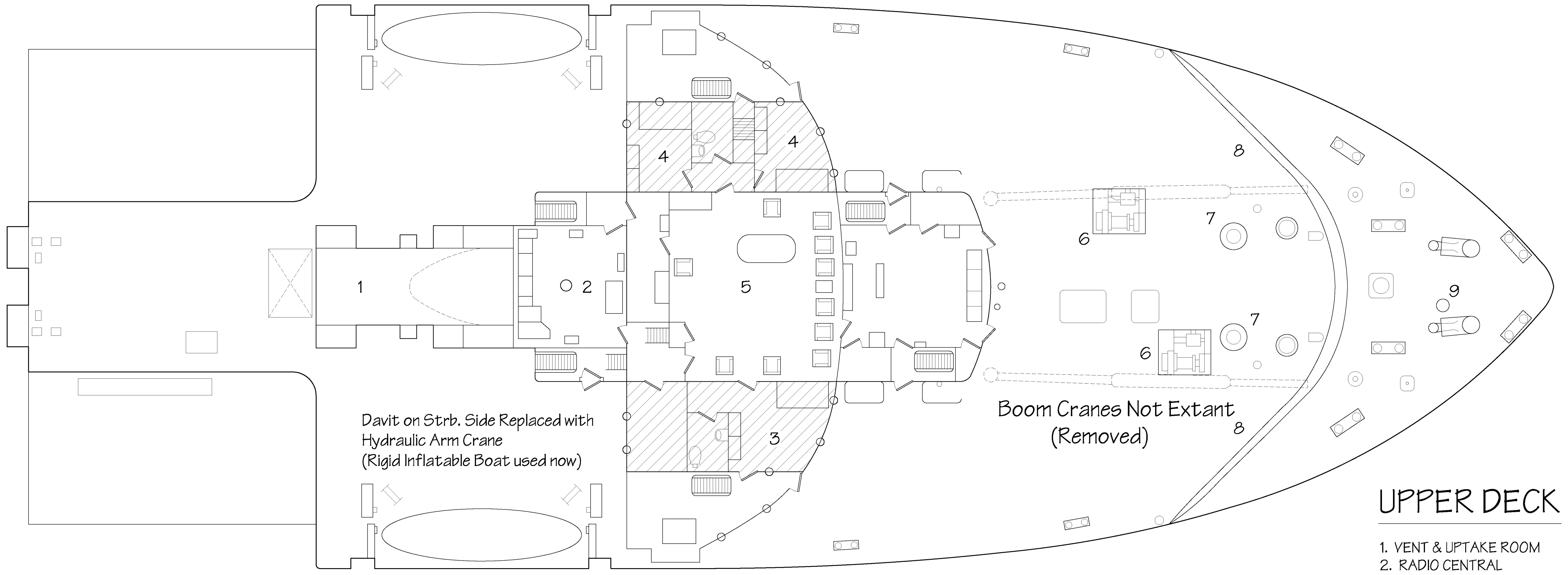

1
2
3
4
4
5
6
6
7
7
8
8
9
Davit on Strb. Side Replaced with Hydraulic Arm Crane (Rigid Inflatable Boat used now)
Boom Cranes Not Extant (Removed)

▨ ADDITION TO ORIGINAL SHIP LAYOUT

UPPER DECK

1. VENT & UPTAKE ROOM
2. RADIO CENTRAL
3. COMMANDING OFFICER STATEROOM
4. GUEST STATEROOM
5. LOUNGE
6. WINCH
7. 21" BUCKET VENT
8. BREAKWATER
9. TRIM TANK ESCAPE VALVE

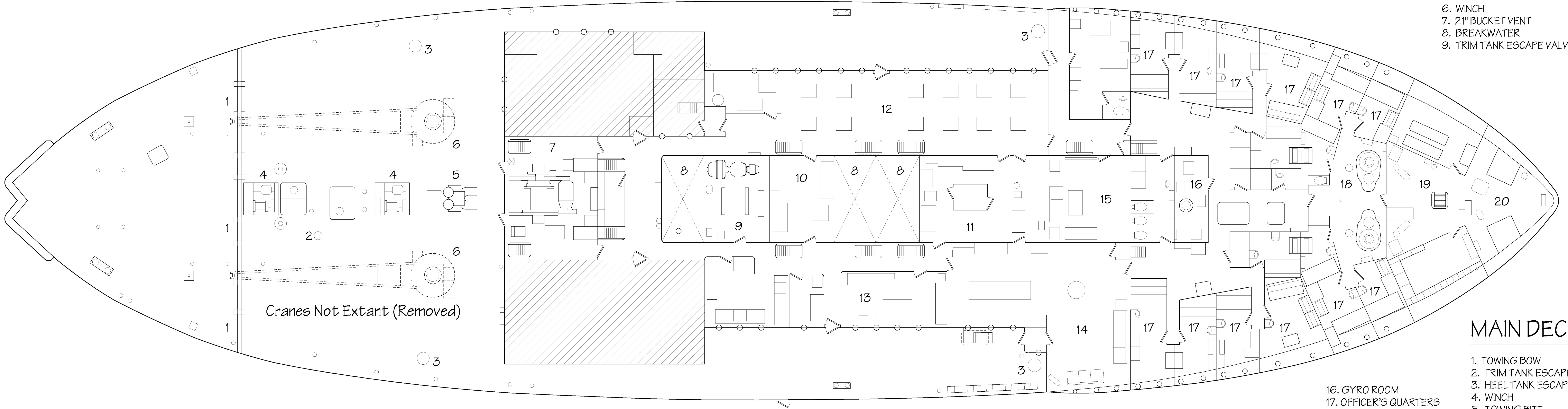

1
1
1
2
3
3
3
3
4
4
5
6
6
7
8
8
8
9
10
11
12
13
14
15
16
17
18
19
20
Cranes Not Extant (Removed)

MAIN DECK

1. TOWING BOW
2. TRIM TANK ESCAPE VALVE
3. HEEL TANK ESCAPE VALVE
4. WINCH
5. TOWING BITT
6. KINGPOST & BOOM
7. TOWING WINCH ROOM
8. VENT TRUNK
9. TOWING MOTOR GENERATOR ROOM
10. SCULLERY
11. GALLEY
12. CREW'S MESS ROOM
13. CPO MESS ROOM
14. WARD ROOM
15. CREW'S LIBRARY
16. GYRO ROOM
17. OFFICER'S QUARTERS
18. WINDLASS ROOM
19. TRUNK
20. LAMP ROOM

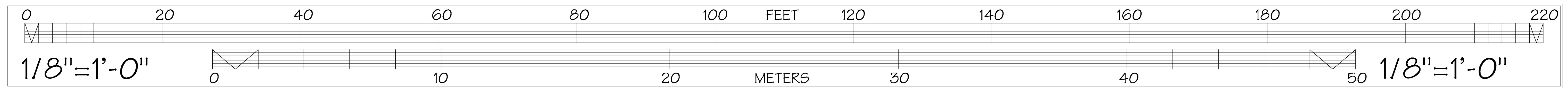

0
20
40
60
80
100
FEET
120
140
160
180
200
220
0
10
20
METERS
30
40
50

1/8"=1'-0"

1/8"=1'-0"

NOTE: DRAWINGS HAVE BEEN TRACED FROM ORIGINAL 1943 CONSTRUCTION PLANS BY THE USCG

DELINEATED BY: GREGOIRE HOLEYMAN

HAER MARITIME
RECORDING PROGRAM
NATIONAL PARK SERVICE
UNITED STATES DEPARTMENT OF THE INTERIOR

CHEBOYGAN

MACKINAW (WAGB 83)
632 COAST GUARD DRIVE
CHEBOYGAN COUNTY

MICHIGAN

SHEET
3 OF 11

HISTORIC AMERICAN
ENGINEERING RECORD
MI-121

LIBRARY OF CONGRESS
INDEX NUMBER

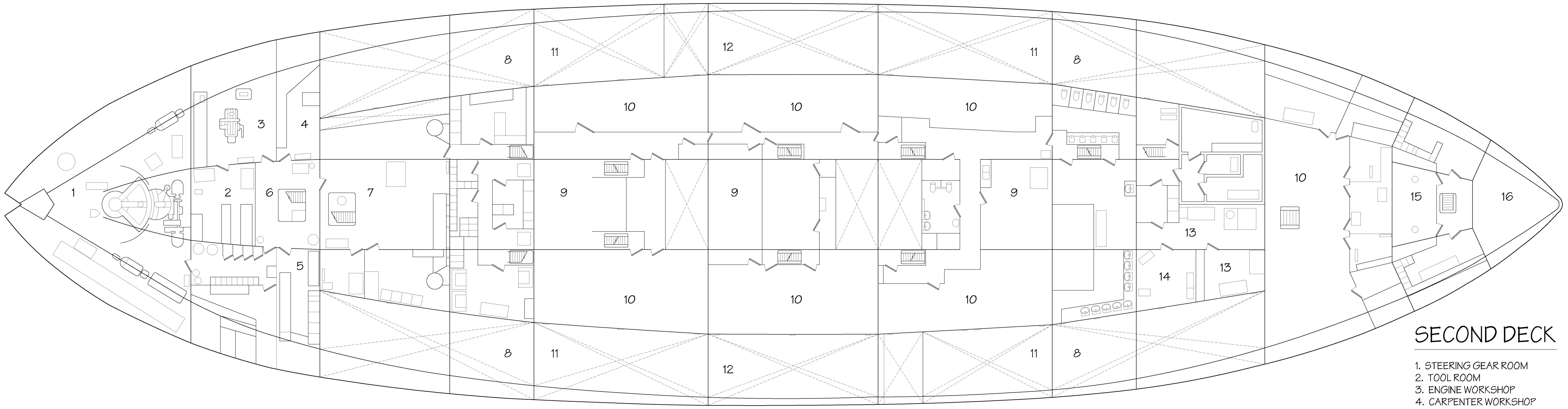
8
11
12
11
8
3
4
10
10
10
1
2
6
7
9
9
9
10
15
16
13
5
14
13
10
10
10
8
11
12
11
8

SECOND DECK

1. STEERING GEAR ROOM
2. TOOL ROOM
3. ENGINE WORKSHOP
4. CARPENTER WORKSHOP
5. ELECTRICITY WORKSHOP
6. TRUNK
7. BOS'NS STORES & CARGO
8. HEEL TANK
9. LOUNGE
10. CREW'S QUARTERS
11. DIESEL OIL TANK
12. DIESEL OIL OVERFLOW TANK
13. PROVISIONS & DRY STORES
14. COMMISSARY OFFICE
15. CAHIN LOCKER
16. FORE PEAK TRIM TANK

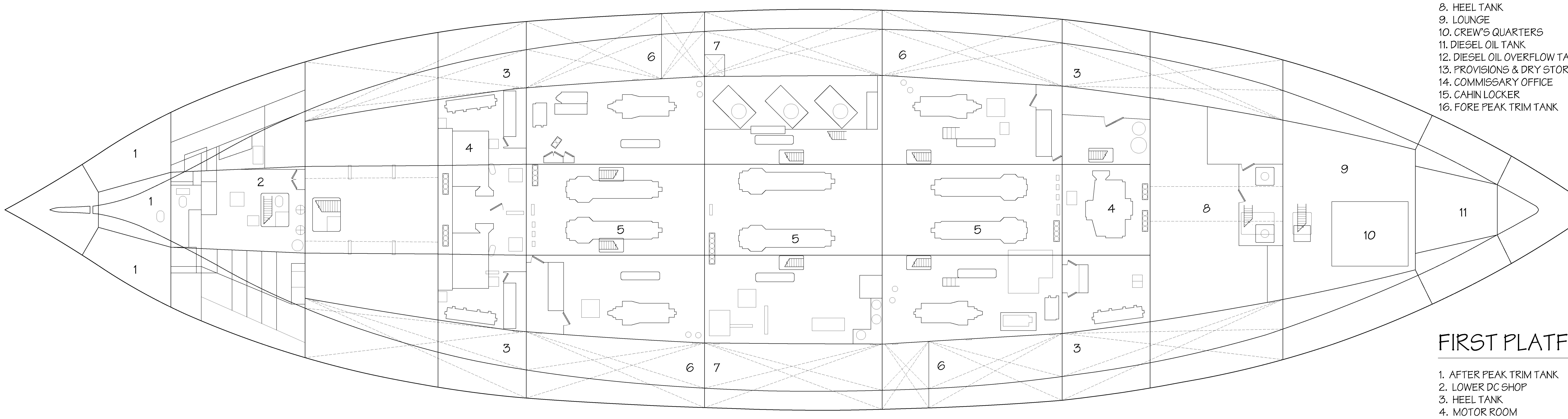
6
7
6
3
3
1
4
2
1
5
5
5
4
8
9
10
11
1
3
6
7
6
3

FIRST PLATFORM

1. AFTER PEAK TRIM TANK
2. LOWER DC SHOP
3. HEEL TANK
4. MOTOR ROOM
5. GENERATOR ROOM
6. DIESEL OIL TANK
7. DIESEL OIL OVERFLOW TANK
8. DRY & GENERAL STORES
9. SPARE PARTS STORAGE
10. SEWAGE RETENTION TANK
11. FORE PEAK TRIM TANK

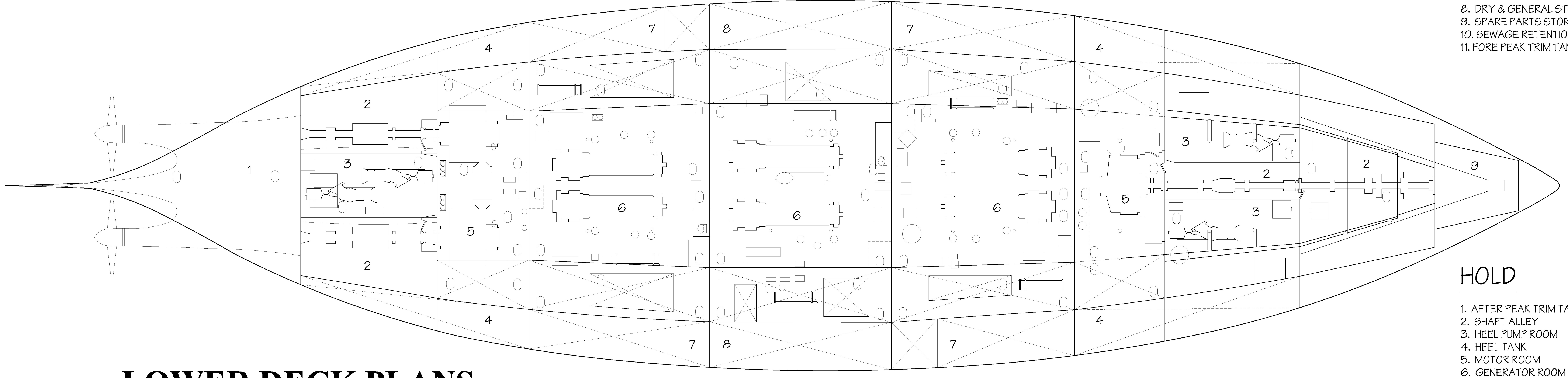
7
8
7
4
4
2
3
1
3
2
6
6
6
5
2
9
5
3
5
2
4
7
8
7
4

HOLD

1. AFTER PEAK TRIM TANK
2. SHAFT ALLEY
3. HEEL PUMP ROOM
4. HEEL TANK
5. MOTOR ROOM
6. GENERATOR ROOM
7. DIESEL OIL TANK
8. DIESEL OIL OVERFLOW TANK
9. FORE PEAK TRIM TANK

LOWER DECK PLANS

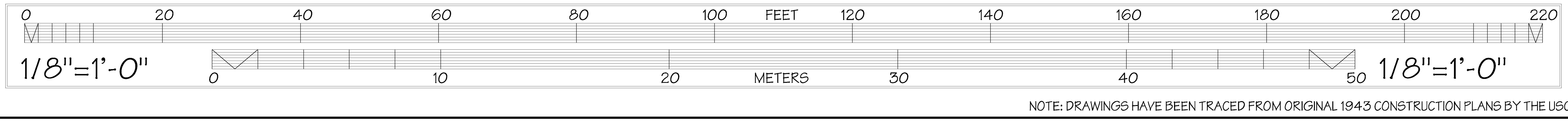
0
20
40
60
80
100
FEET
120
140
160
180
200
220
1/8"=1'-0"
0
10
20
METERS
30
40
50
1/8"=1'-0"

NOTE: DRAWINGS HAVE BEEN TRACED FROM ORIGINAL 1943 CONSTRUCTION PLANS BY THE USCG

DELINEATED BY: GREGOIRE HOLEYMAN

HAER MARITIME
RECORDING PRGRAM
NATIONAL PARK SERVICE
UNITED STATES DEPARTMENT OF THE INTERIOR

CHEBOYGAN

MACKINAW (WAGB 83)
632 COAST GUARD DRIVE
CHEBOYGAN COUNTY

MICHIGAN

SHEET
4 OF 11

HISTORIC AMERICAN
ENGINEERING RECORD
MI-121

LIBRARY OF CONGRESS
INDEX NUMBER

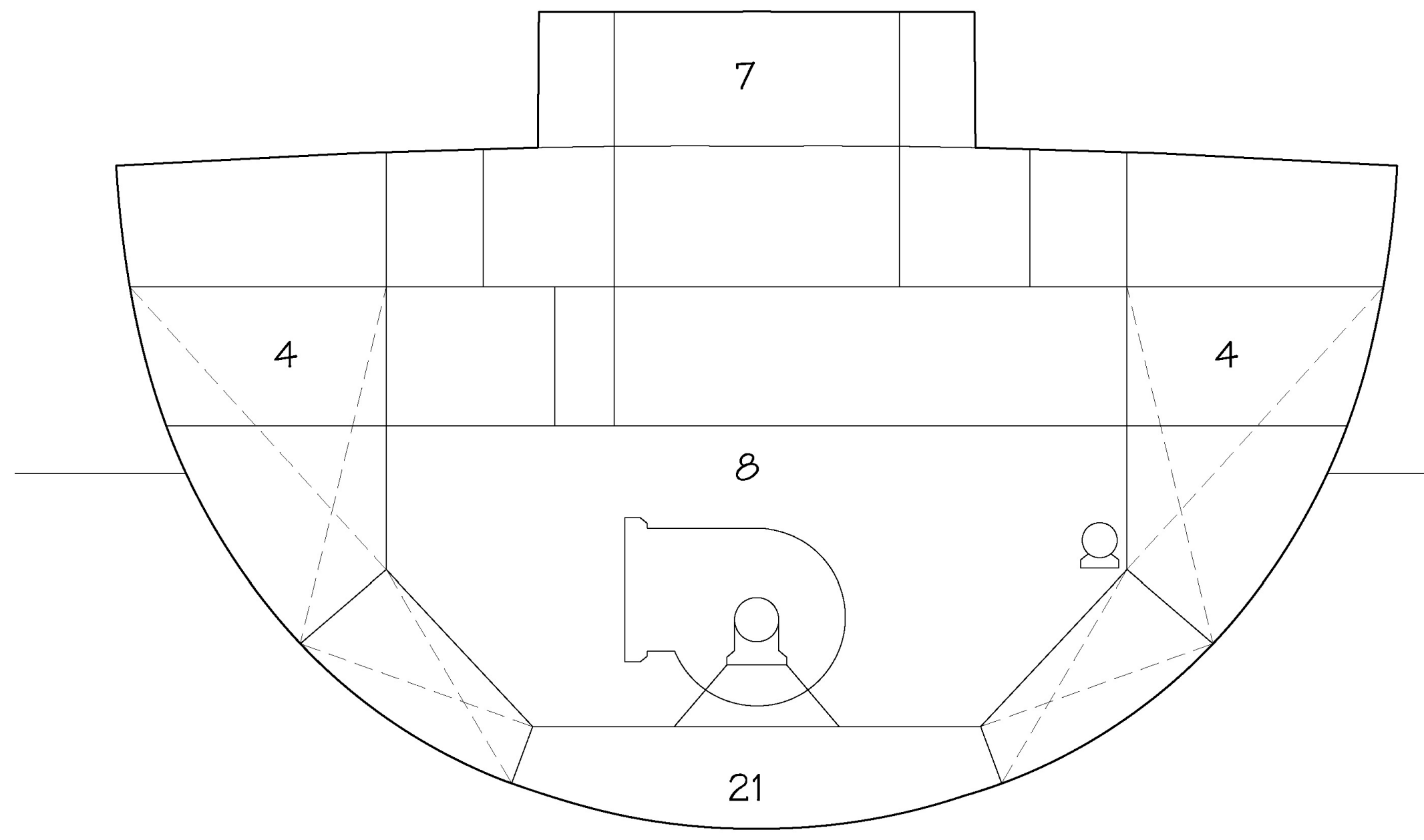

FRAME 60
LOOKING FOR'D

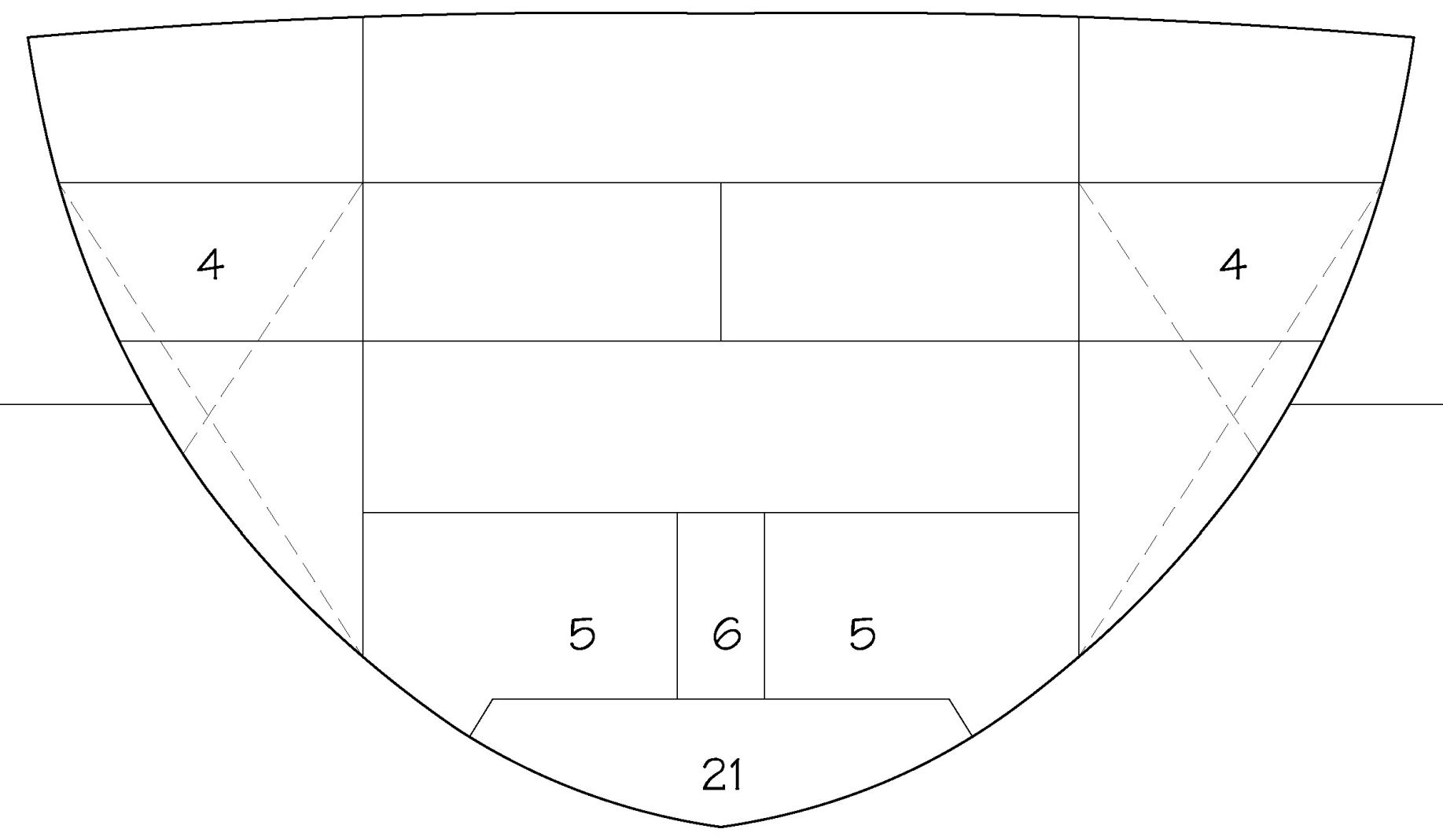

FRAME 45
LOOKING FOR'D

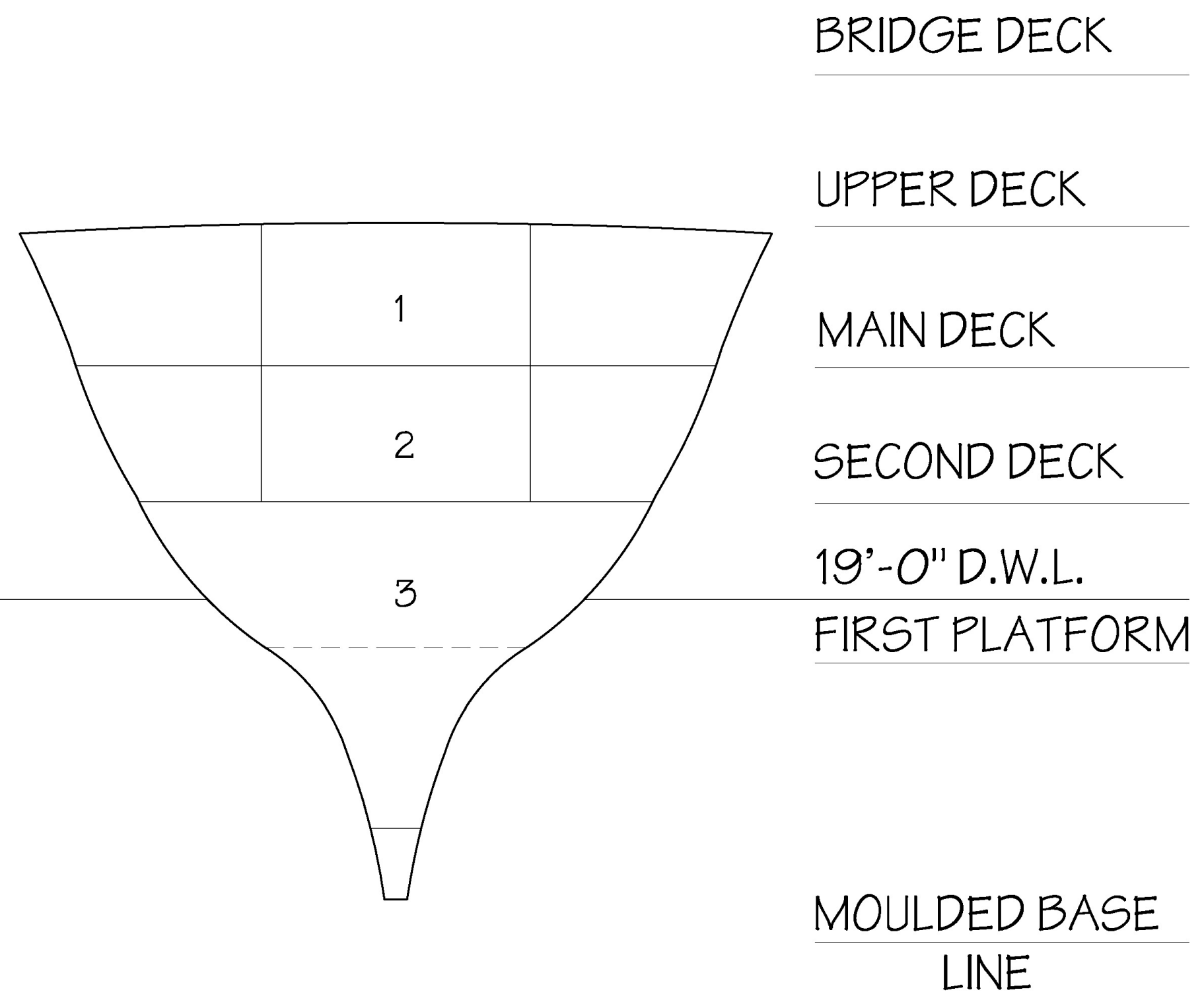
BRIDGE DECK
UPPER DECK
MAIN DECK
SECOND DECK
19'-0" D.W.L.
FIRST PLATFORM
MOULDED BASE LINE
1
2
3

FRAME 16
LOOKING FOR'D

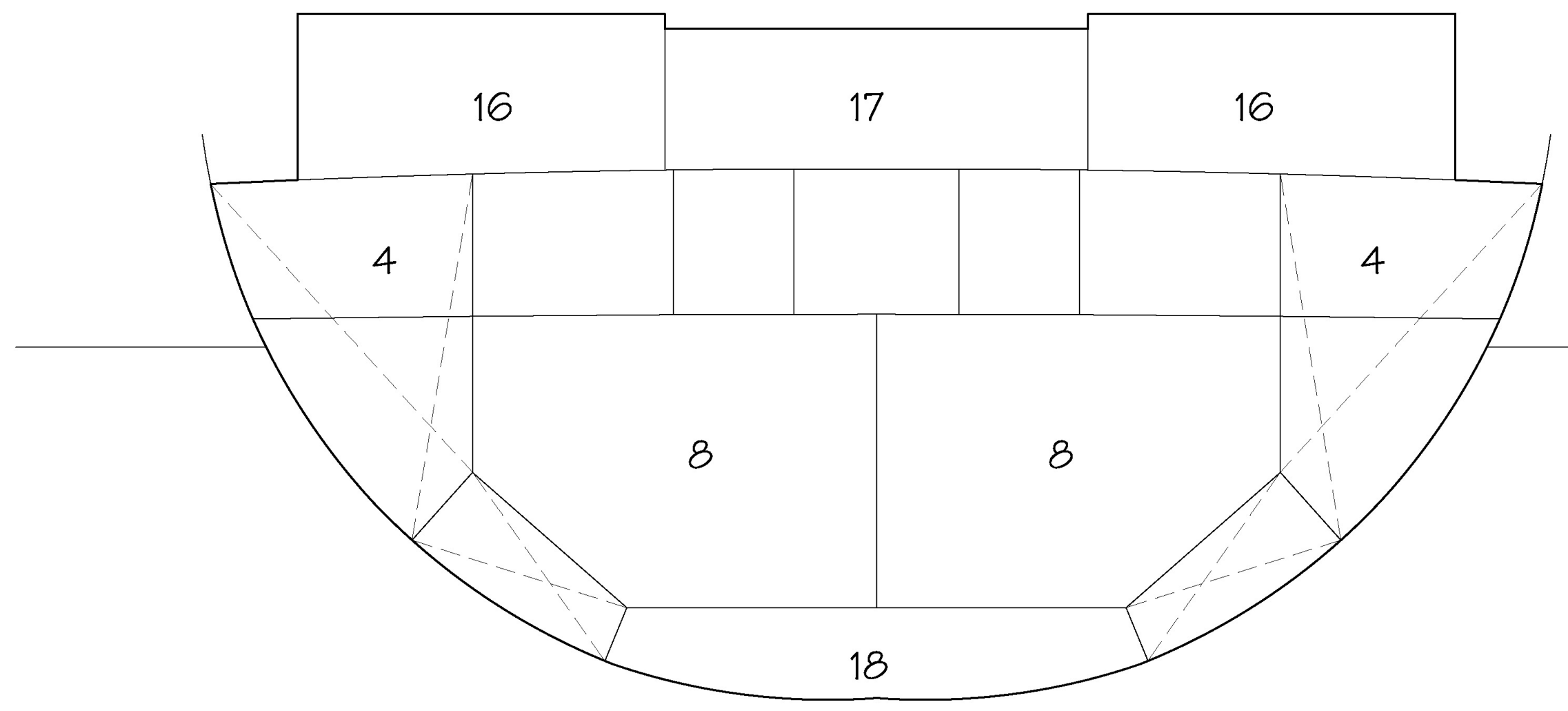
16
17
16
4
4
8
8
18

FRAME 143
LOOKING AFT

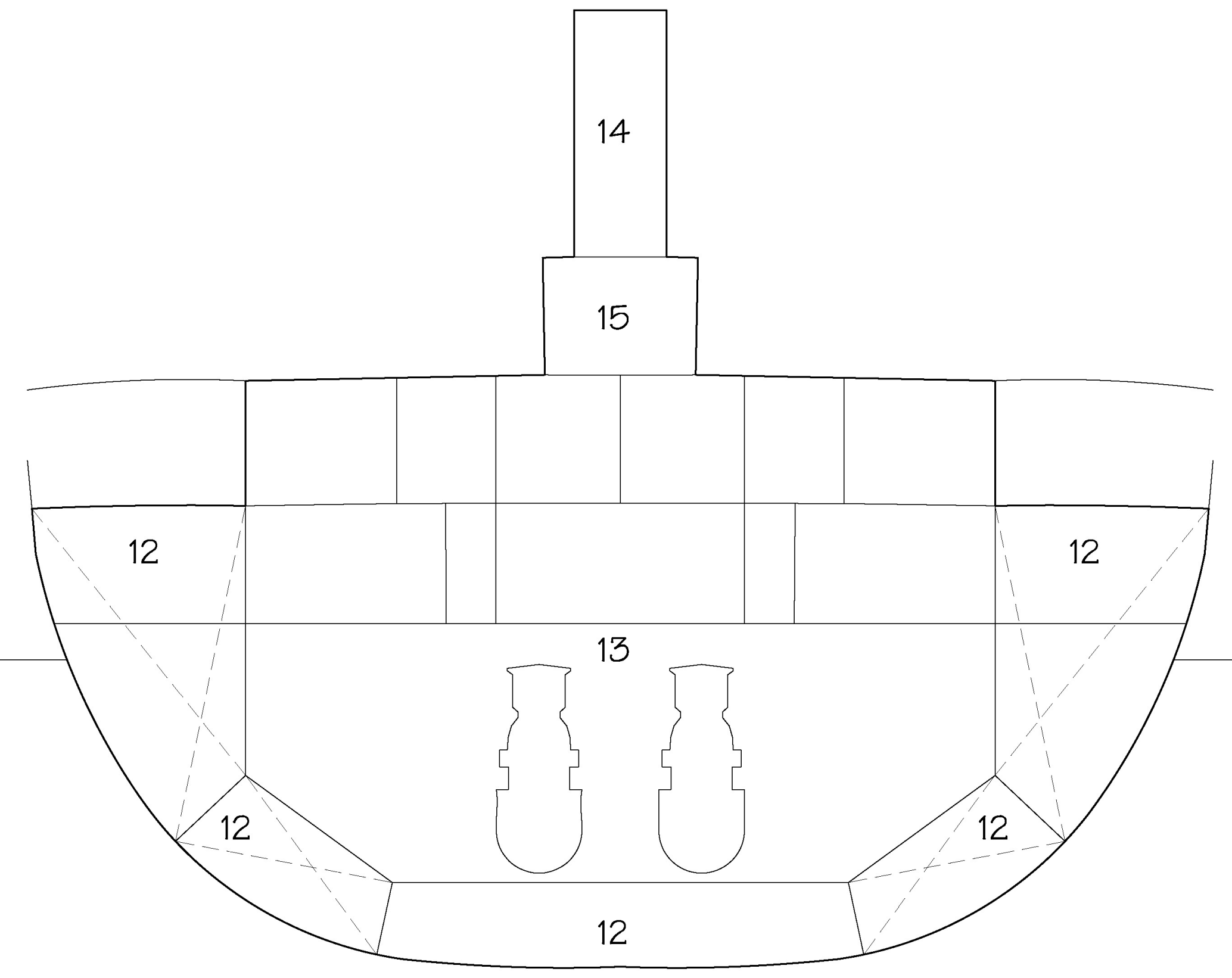
14
15
12
12
13
12
12
12

FRAME 106
LOOKING AFT

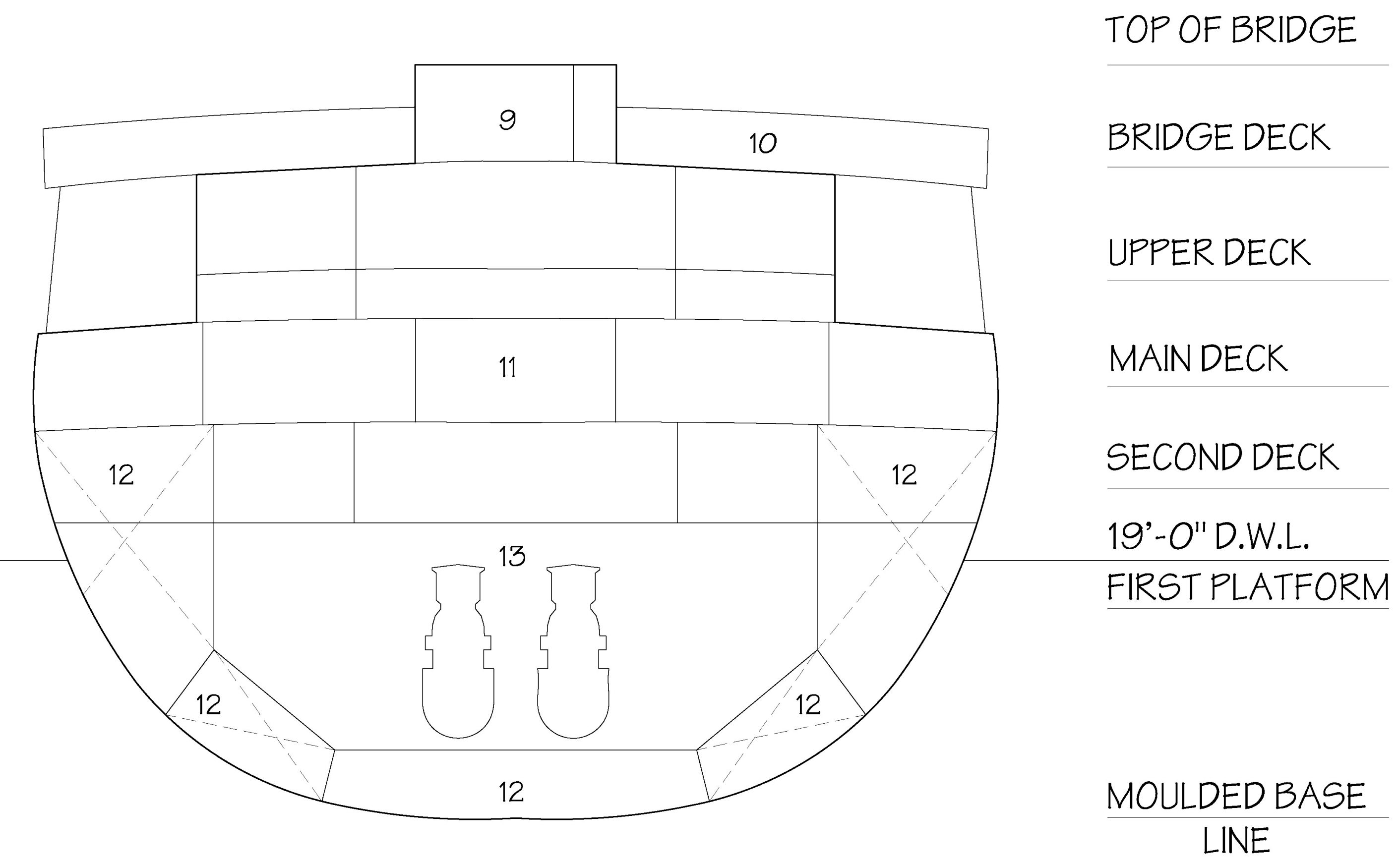
TOP OF BRIDGE
BRIDGE DECK
UPPER DECK
MAIN DECK
SECOND DECK
19'-0" D.W.L.
FIRST PLATFORM
MOULDED BASE LINE
9
10
11
12
12
13
12
12
12

FRAME 80
LOOKING FOR'D

CROSS SECTIONS

1. TRUNK
2. CHAIN LOCKER
3. FORE PEAK TRIM TANK
4. HEEL TANK
5. HEEL PUMP ROOM
6. SHAFT ALLEY
7. WINCH ROOM
8. MOTOR ROOM
9. CHART ROOM
10. SHIELD
11. GALLEY
12. DIESEL OIL TANK
13. GENERATOR ROOM
14. STACK
15. VENT & UPTAKE SPACE
16. DECKHOUSE EXTENSION
17. TOWING MOTOR ROOM
18. BALLAST TANK
19. STEERING GEAR ROOM
20. AFTER PEAK TRIM TANK
21. POTABLE WATER TANK

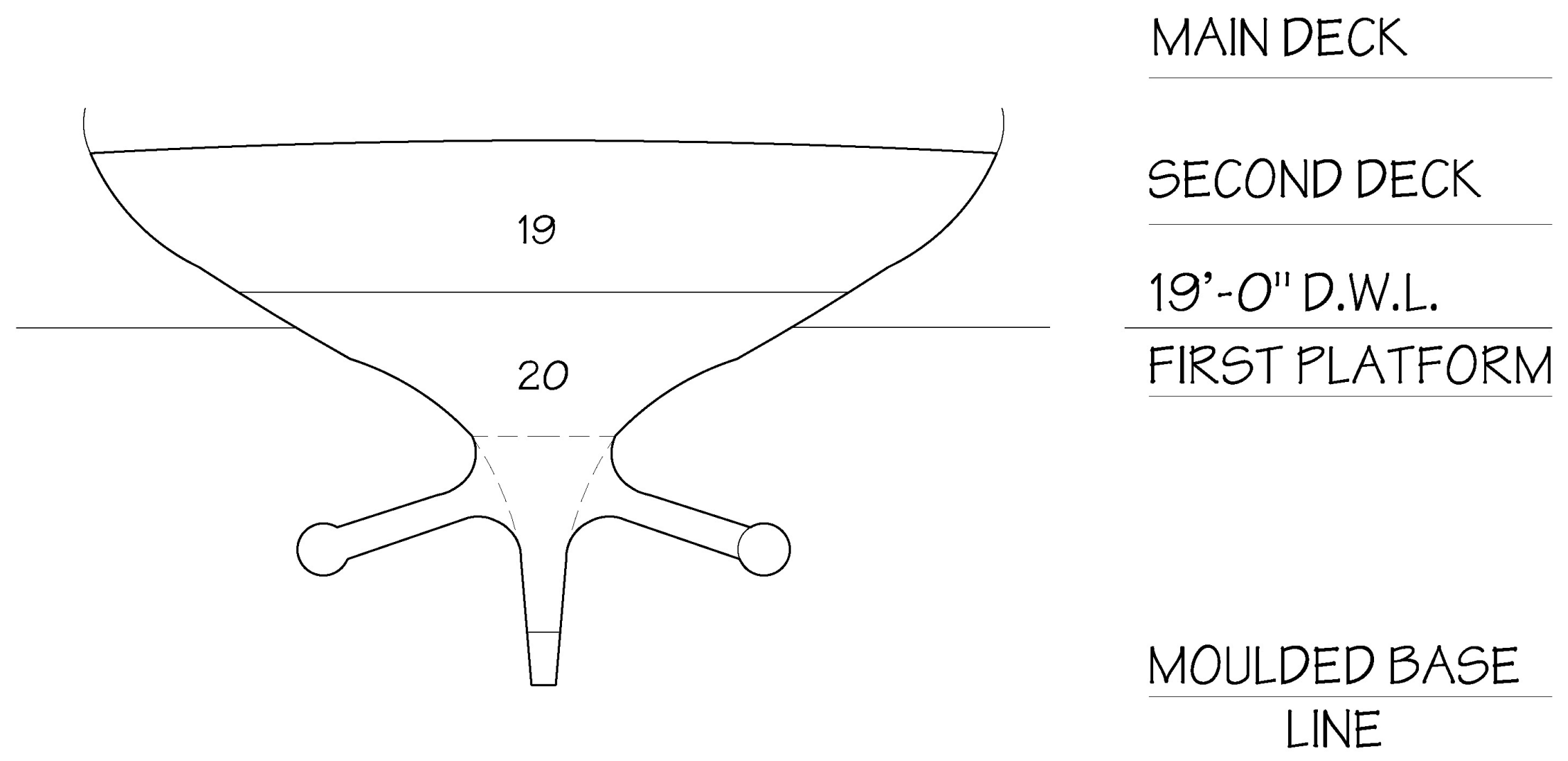
MAIN DECK
SECOND DECK
19'-0" D.W.L.
FIRST PLATFORM
MOULDED BASE LINE
19
20

FRAME 193
LOOKING AFT

CROSS SECTIONS

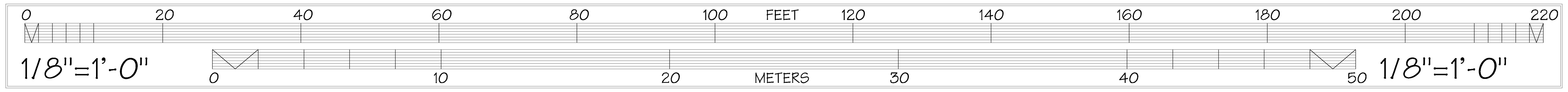
0
20
40
60
80
100
FEET
120
140
160
180
200
220
1/8"=1'-0"
0
10
20
METERS
30
40
50
1/8"=1'-0"

NOTE: DRAWINGS HAVE BEEN TRACED FROM ORIGINAL 1943 CONSTRUCTION PLANS BY THE USCG

DELINEATED BY: GREGOIRE HOLEYMAN

HAER MARITIME
RECORDING PROGRAM
NATIONAL PARK SERVICE
UNITED STATES DEPARTMENT OF THE INTERIOR

MACKINAW (WAGB 83)
632 COAST GUARD DRIVE
CHEBOYGAN COUNTY

CHEBOYGAN

MICHIGAN

SHEET
5 OF 11

HISTORIC AMERICAN
ENGINEERING RECORD
MI-121

LIBRARY OF CONGRESS
INDEX NUMBER

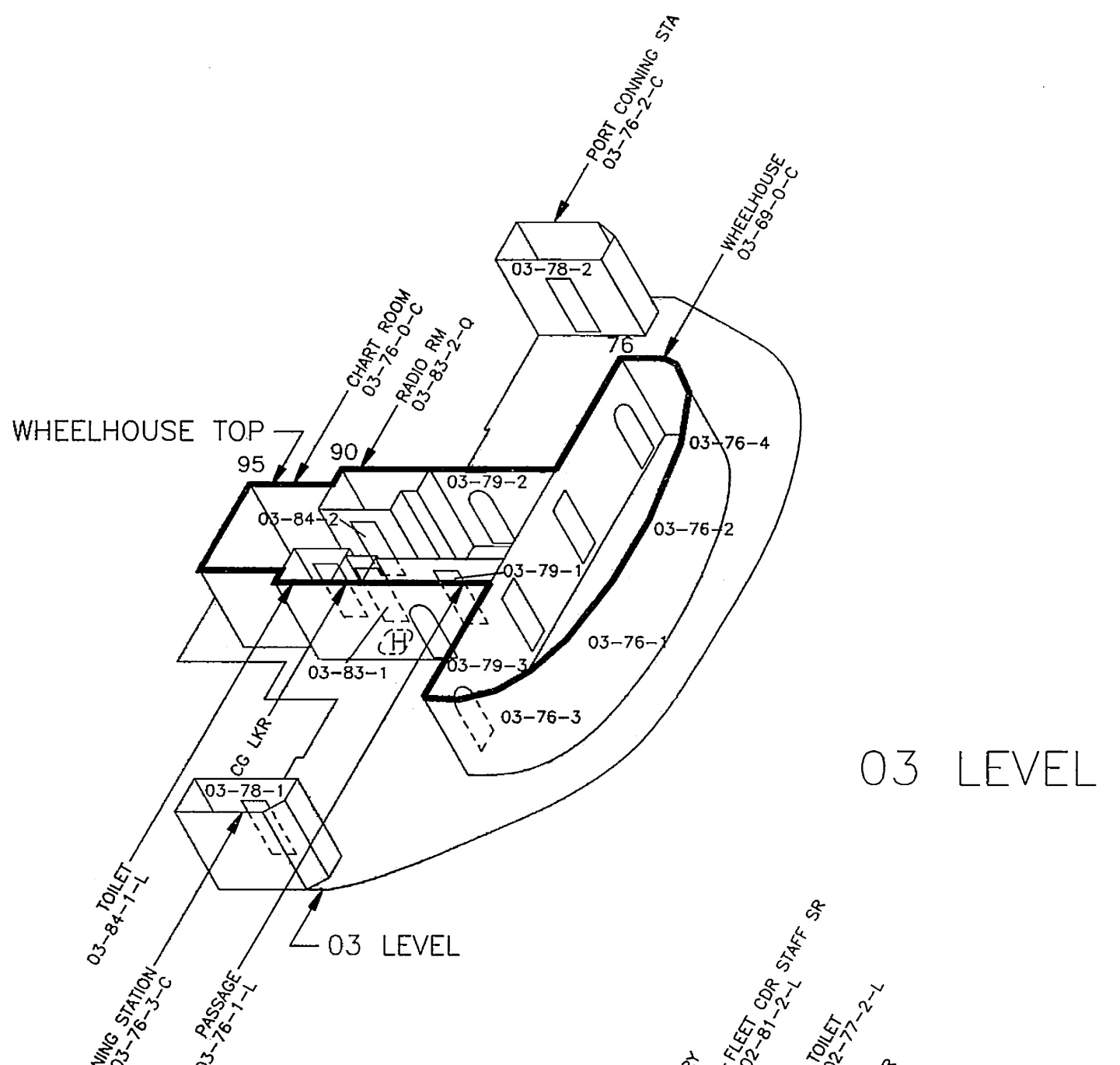

WHEELHOUSE TOP
03 LEVEL

03 LEVEL

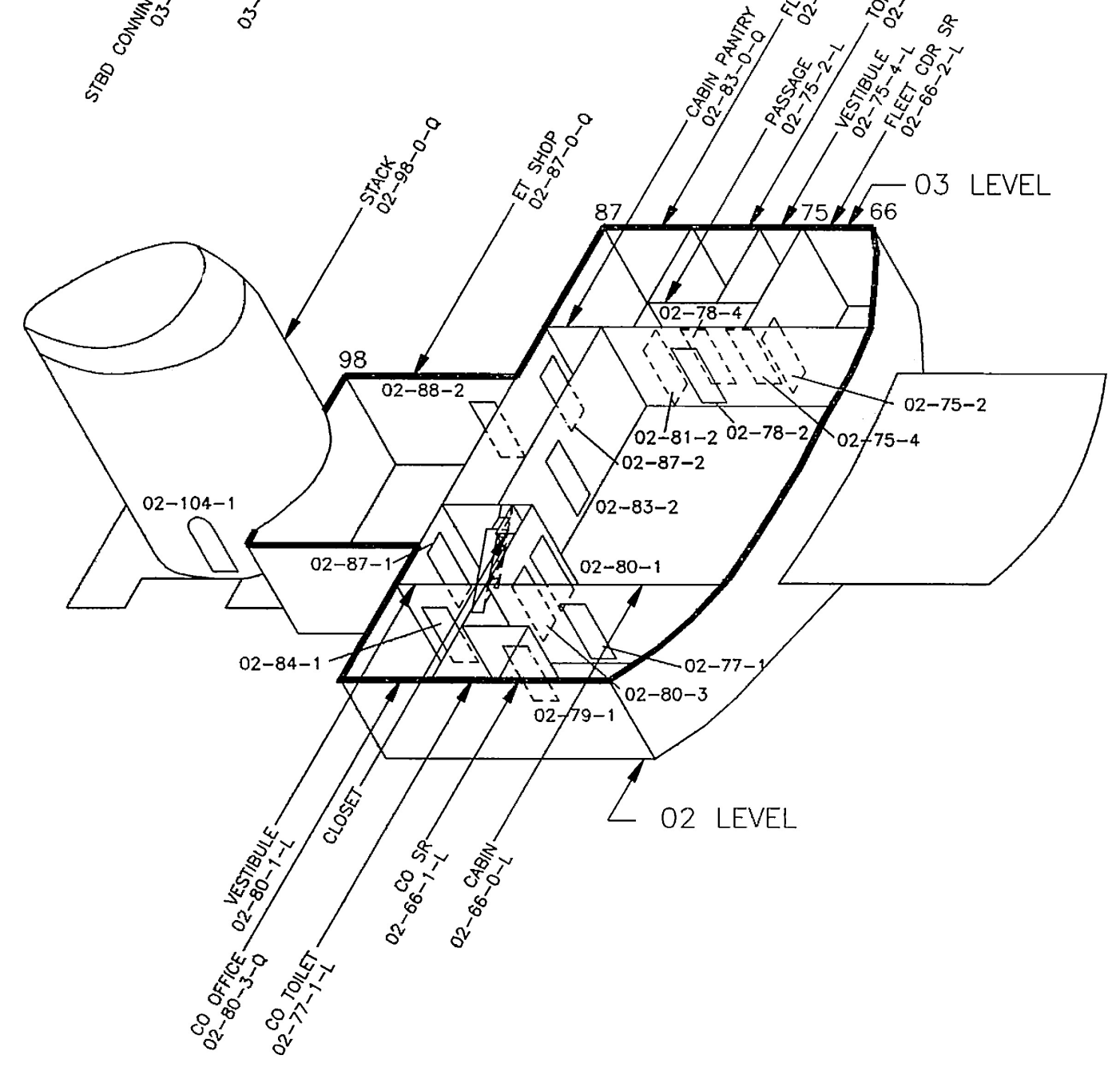

03 LEVEL
02 LEVEL

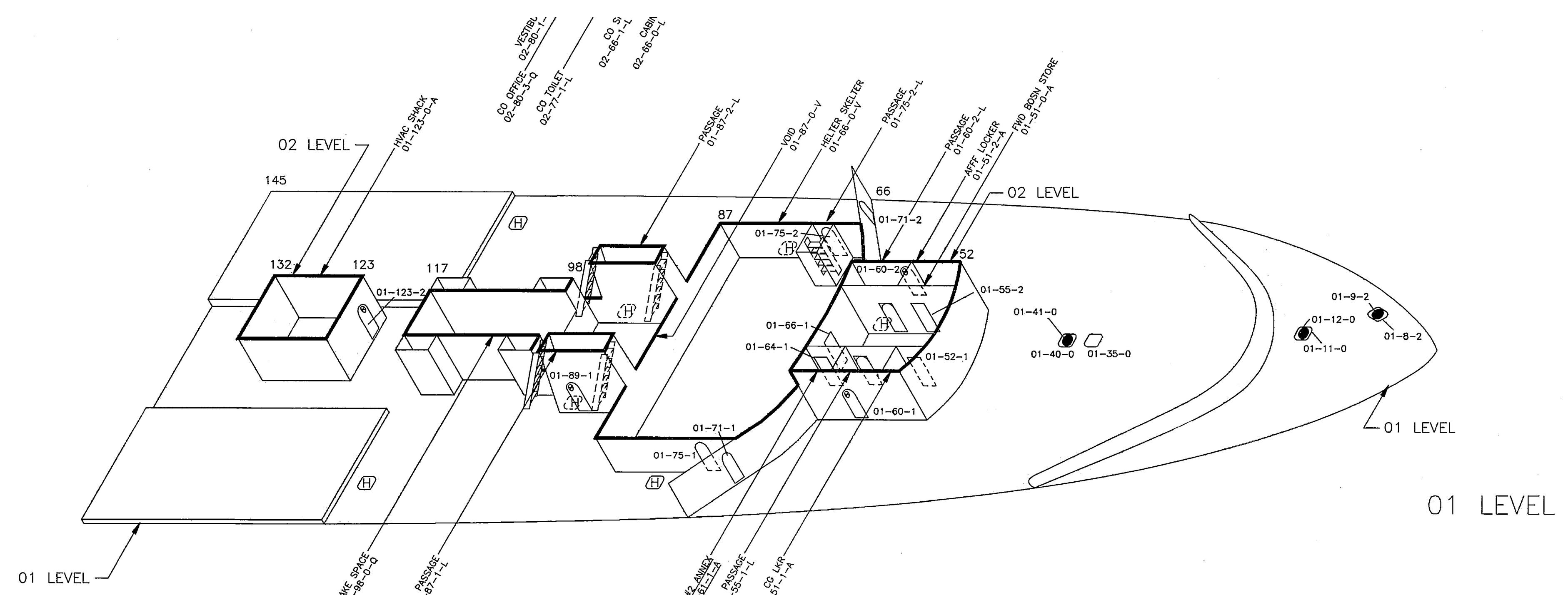

02 LEVEL
01 LEVEL

01 LEVEL

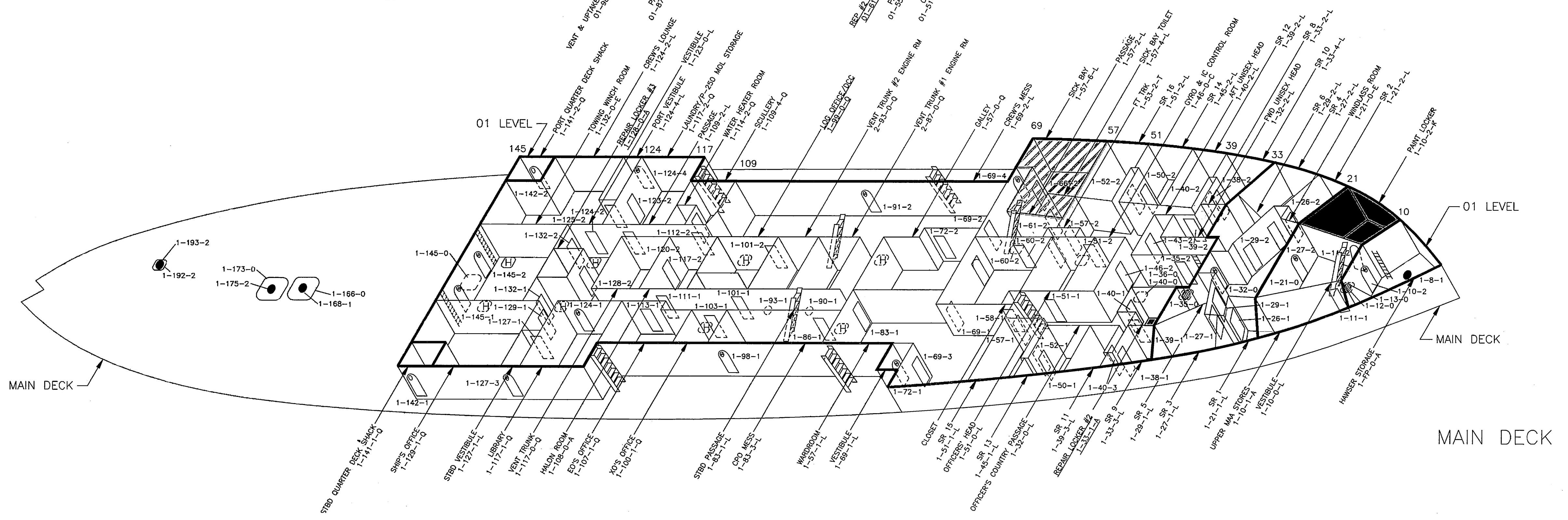

01 LEVEL
MAIN DECK

MAIN DECK

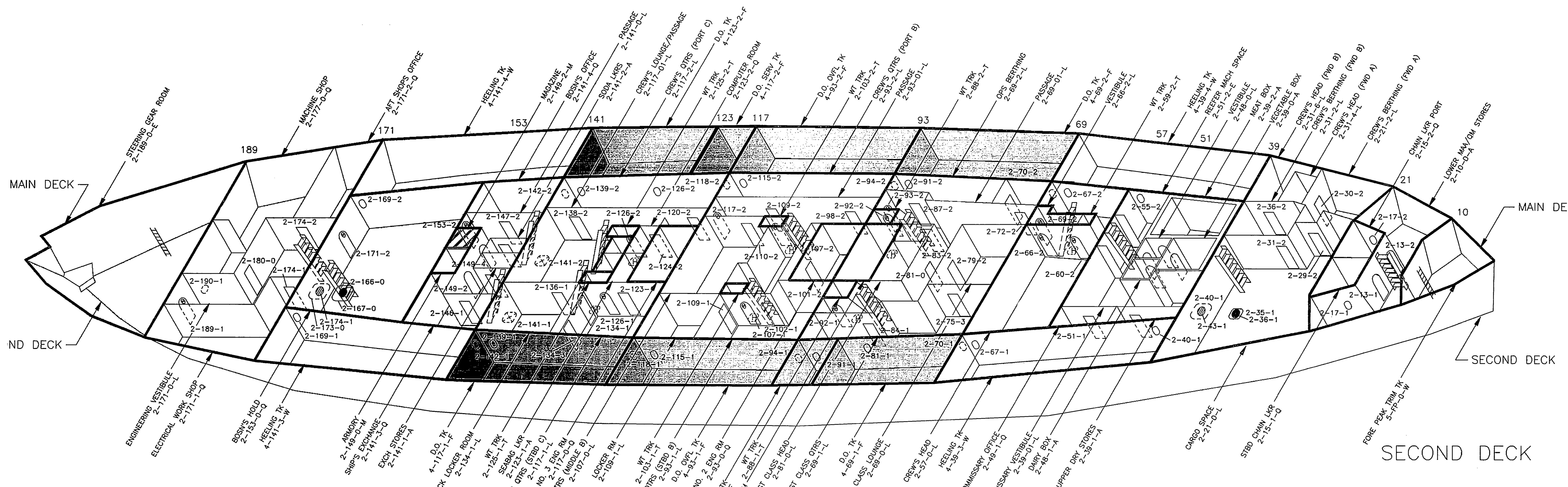

MAIN DECK
SECOND DECK

SECOND DECK

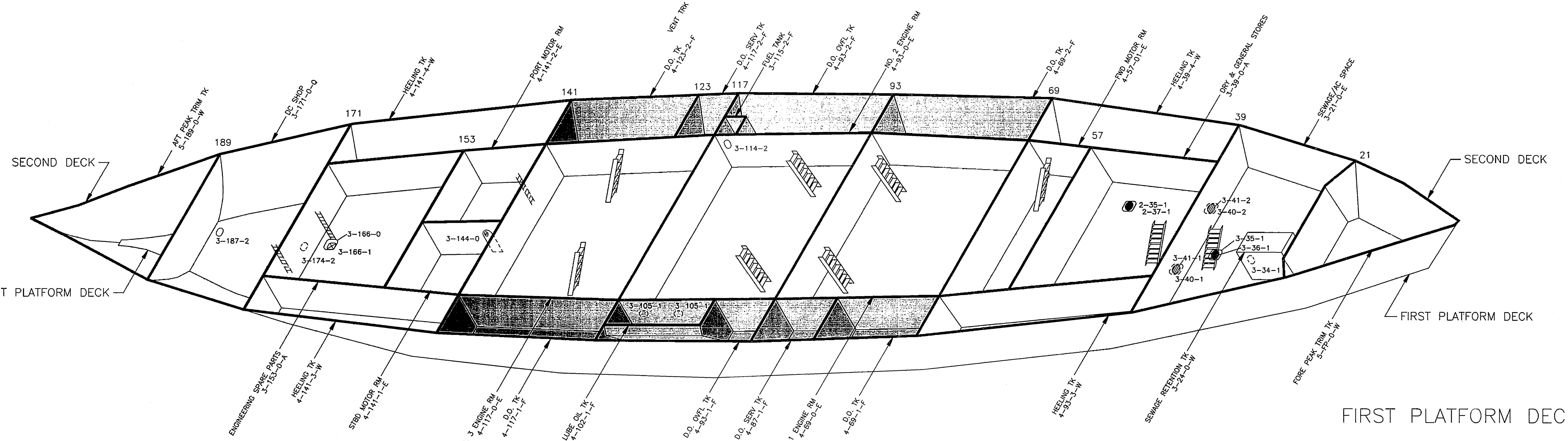

SECOND DECK
FIRST PLATFORM DECK

FIRST PLATFORM DECK

DECK SCHEMATICS

SCALE: 1/16" = 1'-0"

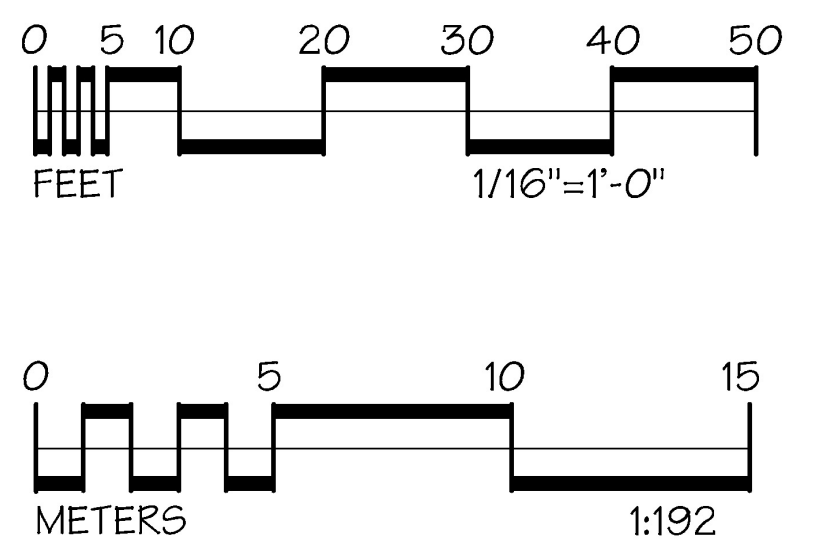

0
5
10
20
30
40
50
FEET
1/16"=1'-0"
0
5
10
15
METERS
1:192

NOTE: IMAGE SCANNED FROM ORIGINAL PLATE SET OF THE CGC MACKINAW

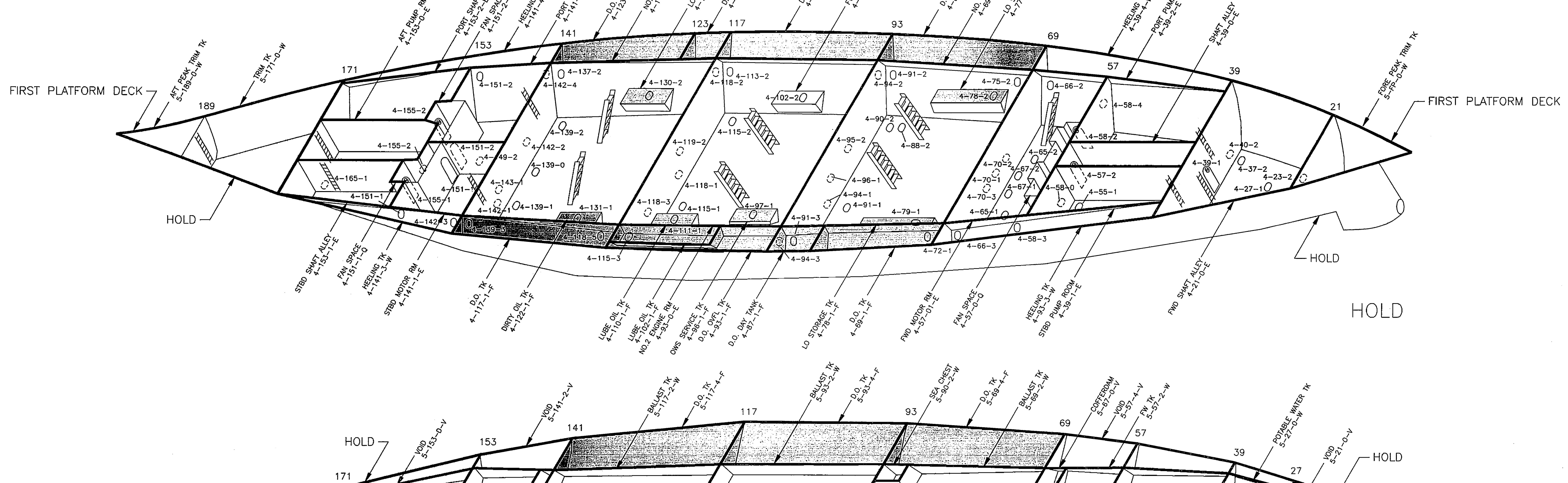

FIRST PLATFORM DECK
HOLD

HOLD

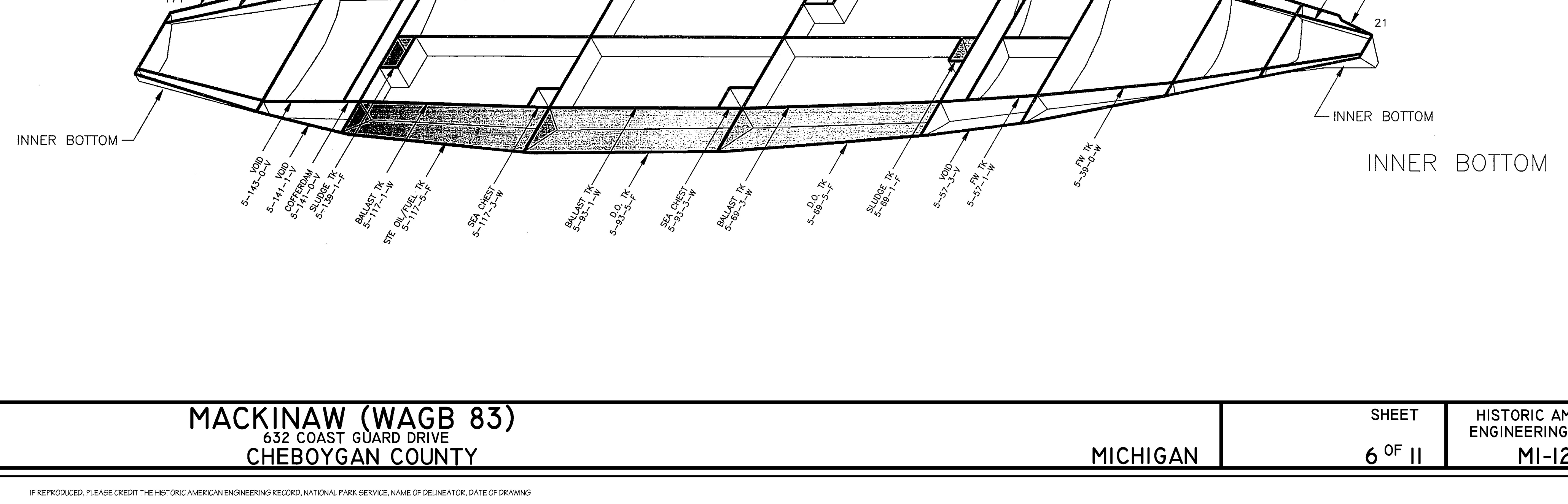

HOLD
INNER BOTTOM

INNER BOTTOM

DELINEATED BY: GREGOIRE HOLEYMAN

HAER MARITIME
RECORDING PROGRAM
NATIONAL PARK SERVICE
UNITED STATES DEPARTMENT OF THE INTERIOR

CHEBOYGAN

MACKINAW (WAGB 83)
632 COAST GUARD DRIVE
CHEBOYGAN COUNTY

MICHIGAN

SHEET
6 OF 11

HISTORIC AMERICAN
ENGINEERING RECORD
MI-121

LIBRARY OF CONGRESS
INDEX NUMBER

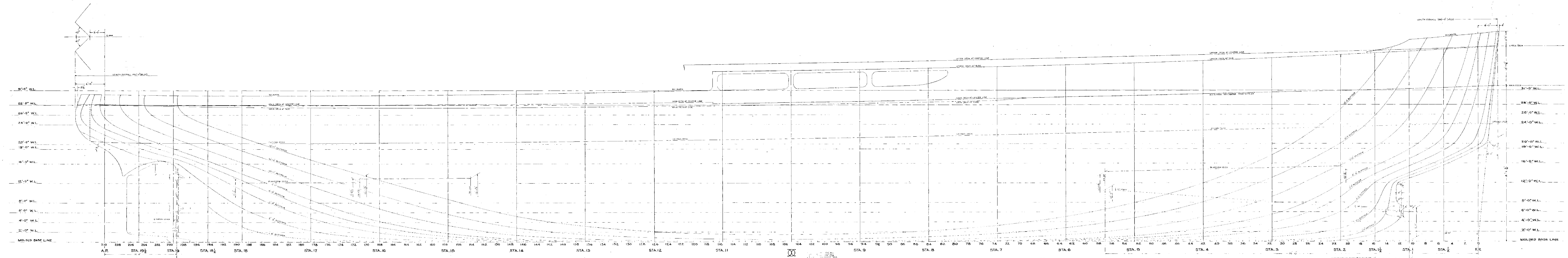
A.P.
STA.19½
STA.19
STA.18½
STA.18
STA.17
STA.16
STA.15
STA.14
STA.13
STA.12
STA.11
STA.10
STA.9
STA.8
STA.7
STA.6
STA.5
STA.4
STA.3
STA.2
STA.1½
STA.1
STA.½
F.P.
MOLDED BASE LINE

SHEAR PLAN

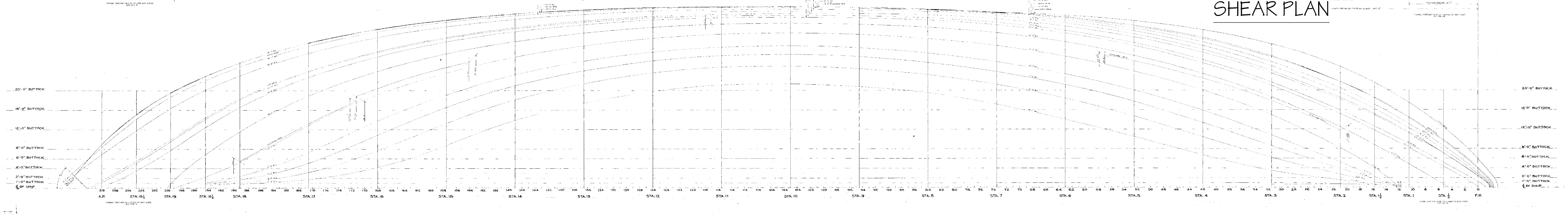
20'-0" BUTTOCK
16'-0" BUTTOCK
12'-0" BUTTOCK
8'-0" BUTTOCK
6'-0" BUTTOCK
4'-0" BUTTOCK
2'-0" BUTTOCK
1'-0" BUTTOCK
℄ OF SHIP
A.P.
STA.19½
STA.19
STA.18½
STA.18
STA.17
STA.16
STA.15
STA.14
STA.13
STA.12
STA.11
STA.10
STA.9
STA.8
STA.7
STA.6
STA.5
STA.4
STA.3
STA.2
STA.1½
STA.1
STA.½
F.P.

HALF-BREADTH PLAN

WATER LINES

STA.	HALF BREADTHS 2'-0"	4'-0"	6'-0"	8'-0"	12'-0"	16'-0	19'-0"	20'-0"	24'-0"	26'-0"	28'-0"	31'-0"
END	—	—	—	—	—	—	—	—	—	—	—	—
F.P.	—	—	—	—	—	—	0-6-1	1-3-1	2-3-4	2-9-0	3-2-3	3-10-4
½	—	—	—	—	—	0-9-0	4-4-5	5-2-0	7-1-6	7-10-7	8-7-4	9-8-0
1	—	—	—	—	—	4-10-1	8-2-7	9-0-0	11-3-6	12-3-0	13-0-7	14-3-4
1½	—	—	—	—	4-0-0	8-9-6	11-9-4	12-7-3	15-1-7	16-2-5	17-1-4	18-4-6
2	1-6-5	2-8-3	3-11-0	5-2-7	8-2-2	12-5-3	15-2-0	15-11-1	18-5-6	19-6-0	20-4-7	21-8-6
3	3-6-0	6-2-7	8-6-4	10-9-1	14-10-6	18-7-0	20-11-1	21-7-2	23-10-6	24-10-5	25-9-1	27-11-6
4	6-8-0	10-4-4	13-4-2	15-11-0	20-0-0	23-5-0	25-7-2	26-2-7	28-3-5	29-1-4	29-10-1	30-9-4
5	10-5-0	14-8-4	17-8-5	20-0-0	23-11-0	27-1-5	29-2-4	29-8-6	31-6-0	32-1-7	32-7-6	33-3-2
6	14-0-2	18-4-7	21-1-5	23-4-1	27-0-0	29-11-1	31-8-6	32-2-7	33-9-1	34-3-2	34-7-7	35-0-3
7	17-1-6	21-2-5	23-9-4	25-9-4	29-1-3	31-9-6	33-5-0	33-10-4	35-3-2	35-7-4	35-10-4	36-0-2
8	19-6-6	23-2-6	25-8-2	27-7-6	30-7-4	32-11-7	34-5-3	34-10-4	36-2-0	36-6-0	36-7-3	36-6-0
9	20-9-2	24-5-6	26-11-5	28-9-2	31-5-4	33-7-2	34-10-4	35-4-0	36-7-0	36-11-3	37-0-7	36-9-4
10	21-4-6	25-0-0	27-4-4	29-2-1	31-9-6	33-9-4	35-0-0	35-4-4	36-7-6	37-0-3	37-2-0	36-11-2
11	21-1-5	24-9-0	27-1-3	28-10-6	31-6-3	33-7-5	34-11-0	35-4-0	36-7-4	37-0-3	37-2-0	—
12	19-9-3	23-7-5	26-0-7	27-10-5	30-8-2	32-11-2	34-5-3	34-10-6	36-3-7	36-9-5	37-0-2	—
13	17-4-6	21-4-5	24-0-2	26-0-0	29-1-4	31-8-7	33-5-1	33-11-4	35-7-5	36-2-6	36-6-2	—
14	13-10-7	18-1-4	20-0-4	23-3-2	26-10-6	30-0-6	32-1-2	32-8-4	34-7-4	35-4-2	35-8-6	—
15	8-7-6	13-2-4	16-5-4	19-1-7	23-6-3	27-6-1	29-11-3	30-7-3	33-0-7	34-0-2	34-4-7	—
16	4-2-3	7-8-2	10-10-2	13-9-2	19-2-1	24-0-0	26-11-4	27-10-2	30-10-5	32-0-7	32-7-5	—
17	1-9-2	3-2-5	5-0-6	7-3-4	12-9-2	18-9-6	22-7-6	23-9-4	27-7-2	29-0-4	29-9-3	—
18	0-10-2	1-1-7	1-8-0	2-5-5	5-3-0	11-7-6	16-6-7	18-0-7	23-0-5	24-10-0	25-8-6	—
18½	—	0-8-4	0-10-0	1-0-6	2-3-4	6-9-4	12-3-3	14-0-4	20-0-0	22-1-3	22-11-4	—
19	—	—	—	—	—	0-9-0	7-8-5	7-6-2	16-2-6	18-7-6	19-6-5	—
19½	—	—	—	—	—	—	3-7-4	5-1-4	11-7-4	14-1-4	15-1-5	—
A.P.	—	—	—	—	—	—	—	1-1-0	6-10-4	8-3-6	8-11-6	—
TRAN.	—	—	—	—	—	—	—	—	2-7-6	2-11-2	2-7-4	—

BUTTOCKS

STA.	HEIGHTS 1'-0"	2'-0"	4'-0"	6'-0"	8'-0"	12'-0"	16'-0"	20'-0"
END	—	—	—	—	—	—	—	—
F.P.	15-7-1	22-8-4	31-6-3	—	—	—	—	—
½	16-2-7	16-10-6	18-8-3	21-5-5	26-5-0	37-10-6	—	—
1	13-5-6	14-1-3	15-4-7	16-11-1	18-10-4	25-6-1	35-3-0	—
1½	3-4-2	7-1-5	12-0-0	13-9-2	15-4-4	19-3-2	24-9-0	34-9-4
2	0-11-4	2-9-6	6-1-3	9-1-3	11-9-3	15-6-7	20-1-1	27-1-2
3	0-3-1	0-11-4	2-4-6	3-10-7	5-6-7	9-2-3	13-2-2	17-9-6
4	0-1-2	0-4-4	0-11-6	1-8-4	2-7-6	5-0-6	8-0-7	11-11-5
5	0-0-6	0-2-3	0-4-5	0-8-7	1-2-7	2-8-0	4-11-1	7-11-5
6	—	0-0-4	0-1-5	0-3-4	0-6-2	1-4-3	2-9-2	5-1-1
7	—	—	0-0-3	0-0-4	0-2-6	0-8-4	1-7-7	3-3-7
8	—	—	—	—	0-0-7	0-4-4	1-0-0	2-2-1
9	—	—	—	—	—	—	0-7-6	1-8-4
10	—	—	—	—	—	—	0-5-6	1-5-6
11	—	—	—	—	—	0-1-4	0-7-0	1-7-4
12	—	—	—	—	0-1-0	0-3-1	0-10-3	2-1-1
13	—	—	—	—	0-1-7	1-4-6	3-0-0	5-4-5
14	—	—	0-2-6	0-4-5	0-7-0	1-4-3	2-10-6	5-2-5
15	0-1-3	0-3-6	0-8-3	1-2-4	1-9-7	3-5-1	5-9-0	8-9-6
16	0-2-4	0-9-1	1-10-5	3-0-1	4-2-2	6-9-4	9-7-3	12-8-0
17	0-7-4	2-4-5	5-0-0	6-11-4	8-8-0	11-6-2	14-1-5	16-10-7
18	3-1-2	6-11-3	10-7-4	12-7-4	13-11-1	16-2-4	18-7-5	21-4-5
18½	7-5-1	11-5-6	14-1-5	15-6-7	16-8-6	18-10-5	21-3-4	24-0-0
19	16-1-4	16-5-1	17-2-6	18-1-5	19-2-7	21-4-6	23-10-7	—
19½	16-8-7	17-8-6	19-3-4	20-6-6	21-8-5	24-3-7	—	—
A.P.	19-11-4	20-8-4	21-10-7	23-2-4	25-5-4	—	—	—
TRAN.	21-6-3	22-6-5 30-8-4	—	—	—	—	—	—

STA.	UPPER DECK HT. AT C.	UPPER DECK HT. SIDE	UPPER DECK HALF BREADTH	MAIN DECK HT AT C.	MAIN DECK HT. SIDE	MAIN DECK HALF BREADTH	2ND DECK HEIGHT	2ND DECK HALF BREADTH	PLATFORM HEIGHT	PLATFORM HALF BREADTH
END	40-0-0	40-0-0	—	31-11-6	31-11-6	—	24-5-0	—	—	—
F.P.	39-9-4	39-9-1	5-10-3	31-9-3	31-9-3	4-0-5	24-3-4	2-4-3	—	—
½	39-7-4	39-5-1	12-5-2	31-6-3	31-6-3	9-10-1	24-0-7	6-1-3	—	—
1	39-4-3	39-0-0	17-5-5	31-3-5	31-3-5	14-6-0	23-10-0	11-2-4	—	—
1½	39-2-5	38-7-7	21-6-7	31-1-2	31-1-2	18-6-2	23-7-4	14-10-7	—	—
2	38-11-1	38-2-1	24-9-7	30-10-6	30-10-6	21-8-2	23-5-0	18-2-0	15-5-0	11-10-1
3	38-7-6	37-7-6	29-5-6	30-7-2	30-7-2	26-9-5	23-1-3	23-6-1	15-1-3	17-10-2
4	38-2-7	37-0-2	32-4-5	30-2-4	30-2-4	30-6-6	22-8-7	27-8-6	14-8-7	22-5-0
5	38-0-0	36-7-4	34-3-2	29-11-1	29-11-1	33-1-4	22-5-6	30-11-0	FR. 57 14-3-4	FR 57 27-2-6
6	37-7-2	36-1-7	35-5-1	29-6-7	29-6-7	34-10-4	22-1-2	33-1-5	—	—
7	37-4-5	35-10-3	35-11-2	29-4-3	28-11-4	35-11-3	21-10-2	34-8-1	—	—
8	37-0-3	35-6-3	36-1-5	29-0-0	28-6-6	36-7-6	21-6-2	35-5-3	—	—
9	36-10-1	35-4-4	36-2-4	28-9-4	28-4-5	37-0-2	21-4-0	35-8-7	—	—
10	36-7-4	35-1-2	36-2-4	28-6-1	28-0-5	37-2-0	21-0-5	35-8-7	—	—
11	36-4-7	34-11-4	36-2-4	28-4-2	27-11-0	37-1-5	20-11-2	35-7-4	—	—
12	FR 117 36-4-5	FR. 117 34-10-5	FR. 117 36-2-0	28-5-2	27-8-5	36-11-7	20-8-1	35-2-1	—	—
13	—	—	—	28-4-2	27-7-7	36-6-3	20-7-2	34-3-2	—	—
14	—	—	—	28-2-0	27-5-7	35-8-1	20-5-0	32-11-0	—	—
15	—	—	—	28-0-7	27-5-4	34-5-2	20-4-4	30-10-7	FR. 154 13-1-1	FR 154 25-10-4
16	—	—	—	27-11-7	27-5-0	32-6-5	20-2-7	28-0-3	12-11-6	20-4-6
17	—	—	—	27-11-5	27-6-4	29-8-7	20-2-5	23-11-7	12-2-3	13-2-7
18	—	—	—	27-11-0	27-6-6	25-7-5	20-2-0	18-3-5	12-2-0	5-5-2
18½	—	—	—	28-0-0	27-8-6	22-10-5	20-3-0	14-5-3	—	—
19	—	—	—	28-0-0	27-9-7	19-6-2	20-3-0	9-11-4	—	—
19½	—	—	—	28-0-6	27-11-1	15-0-6	20-3-4	5-7-0	—	—
A.P.	—	—	—	28-1-1	28-0-5	8-11-7	20-4-1	1-5-7	—	—
TRAN.	—	—	—	28-3-0	28-3-0	2-6-3	—	—	—	—

OFFSET TABLES

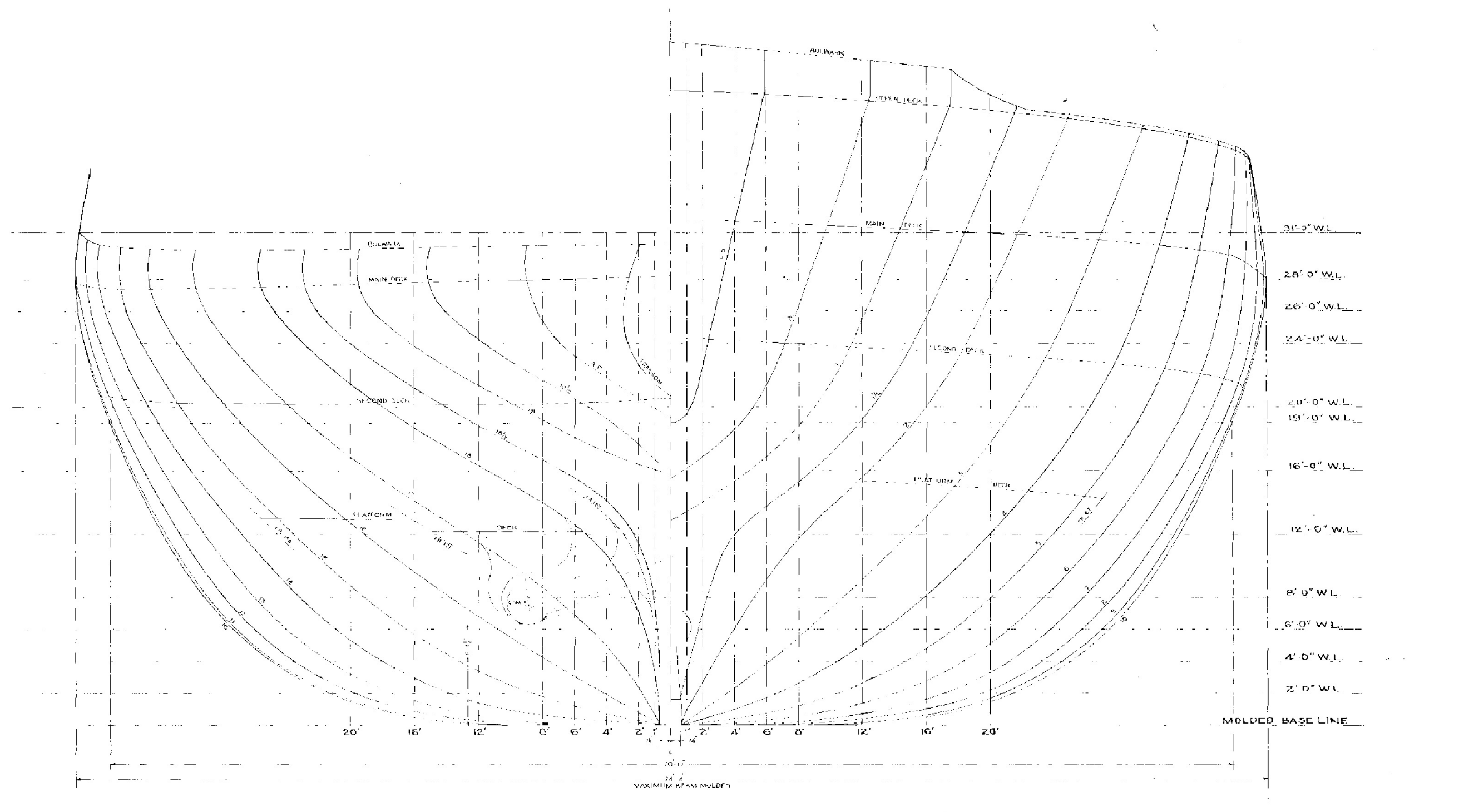
MOLDED BASE LINE

BODY PLAN

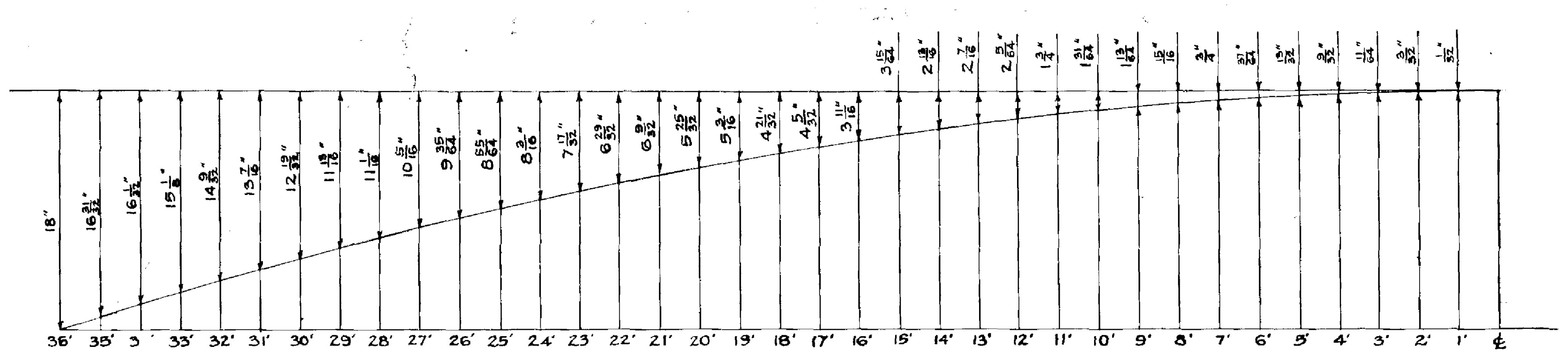
18"
36' 35' 3' 33' 32' 31' 30' 29' 28' 27' 26' 25' 24' 23' 22' 21' 20' 19' 18' 17' 16' 15' 14' 13' 12' 11' 10' 9' 8' 7' 6' 5' 4' 3' 2' 1' ℄

CAMBER CURVE FOR UPPER DECK & DECKS ABOVE UPPER DECK

SCALE: 1/4" = 1'-0"

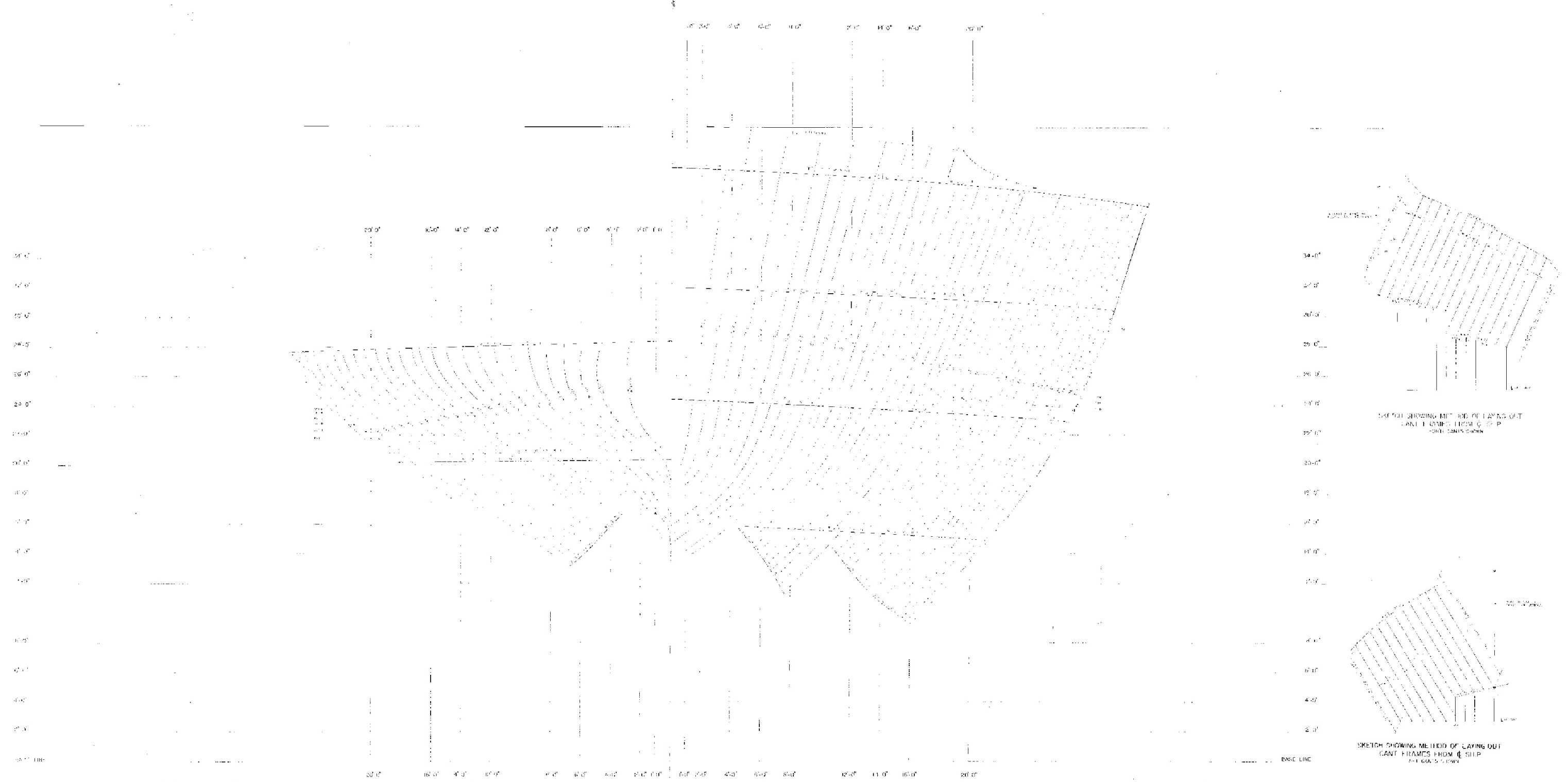

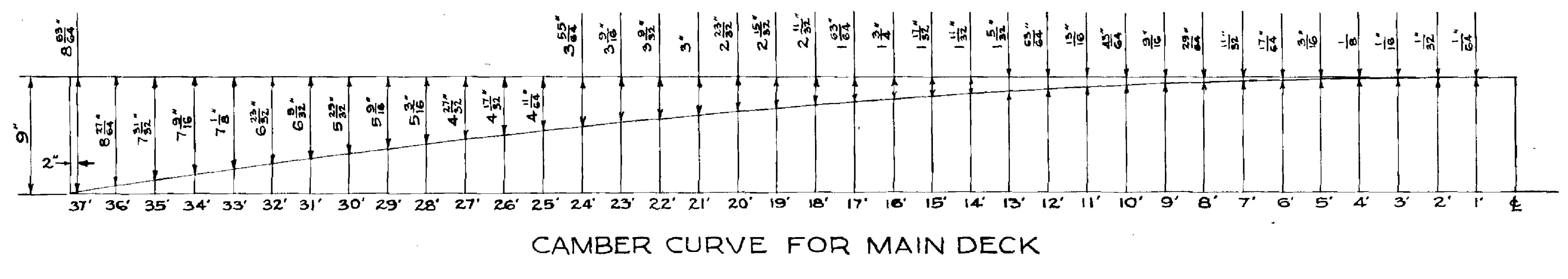
9"
2"
37' 36' 35' 34' 33' 32' 31' 30' 29' 28' 27' 26' 25' 24' 23' 22' 21' 20' 19' 18' 17' 16' 15' 14' 13' 12' 11' 10' 9' 8' 7' 6' 5' 4' 3' 2' 1' ℄

CAMBER CURVE FOR MAIN DECK

SCALE: 1/4" = 1'-0"

FRAMING PLAN

LINES PLAN

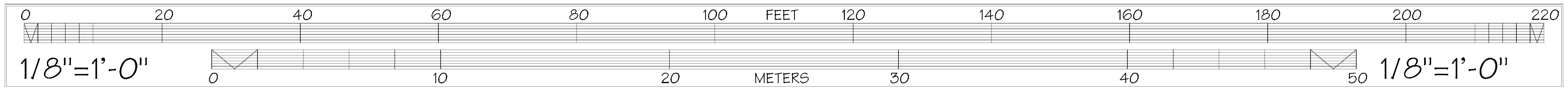
0
20
40
60
80
100
FEET
120
140
160
180
200
220
1/8"=1'-0"
0
10
20
METERS
30
40
50
1/8"=1'-0"

NOTE: SCANS FROM ORIGINAL 1943 CONSTRUCTION PLANS BY THE USCG

DELINEATED BY: GREGOIRE HOLEYMAN

HAER MARITIME
RECORDING PROGRAM
NATIONAL PARK SERVICE
UNITED STATES DEPARTMENT OF THE INTERIOR

MACKINAW (WAGB 83)
632 COAST GUARD DRIVE
CHEBOYGAN COUNTY

CHEBOYGAN

MICHIGAN

SHEET
7 OF 11

HISTORIC AMERICAN
ENGINEERING RECORD
MI-121

LIBRARY OF CONGRESS
INDEX NUMBER

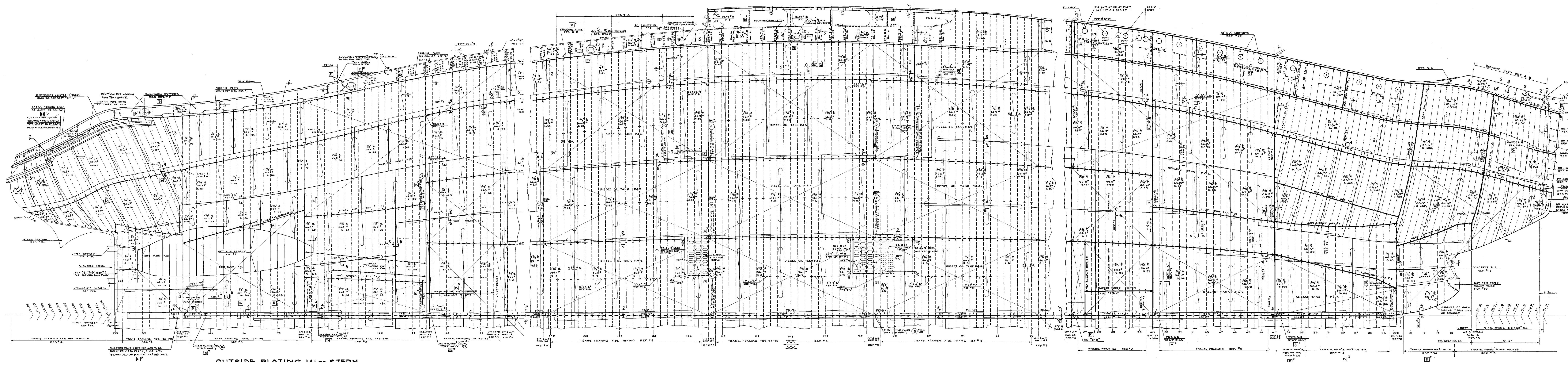

SHELL EXPANSION PLAN

SHELL EXPANSION PLAN

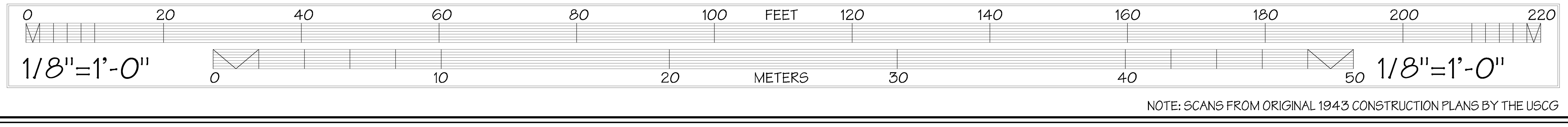
0
20
40
60
80
100
FEET
120
140
160
180
200
220
1/8"=1'-0"
0
10
20
METERS
30
40
50
1/8"=1'-0"

NOTE: SCANS FROM ORIGINAL 1943 CONSTRUCTION PLANS BY THE USCG

DELINEATED BY: GREGOIRE HOLEYMAN

HAER MARITIME
RECORDING PROGRAM
NATIONAL PARK SERVICE
UNITED STATES DEPARTMENT OF THE INTERIOR

CHEBOYGAN

MACKINAW (WAGB 83)
632 COAST GUARD DRIVE
CHEBOYGAN COUNTY

MICHIGAN

SHEET
8 OF 11

HISTORIC AMERICAN
ENGINEERING RECORD
MI-121

LIBRARY OF CONGRESS
INDEX NUMBER

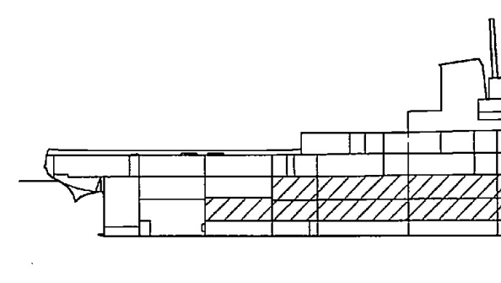

INBOARD PROFILE

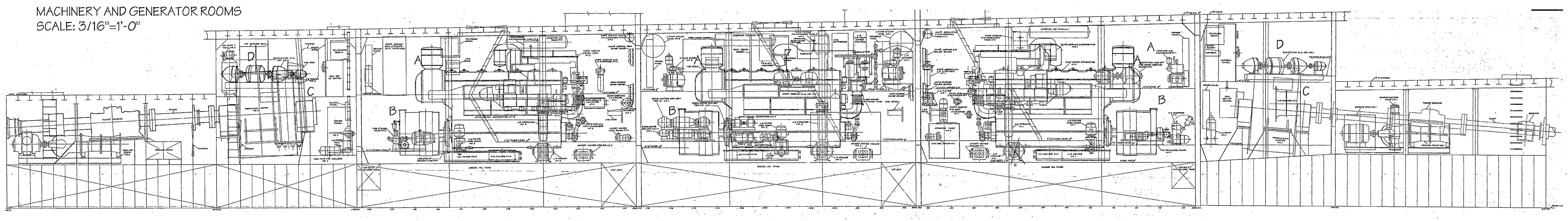
MACHINERY AND GENERATOR ROOMS
SCALE: 3/16"=1'-0"

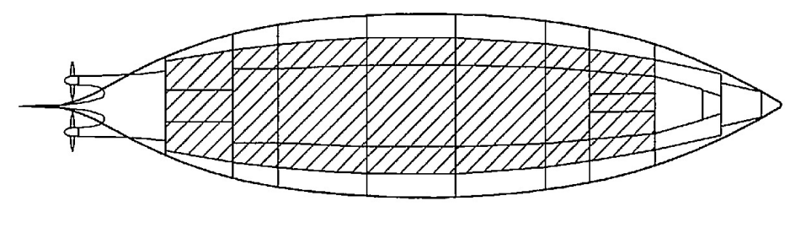

HOLD

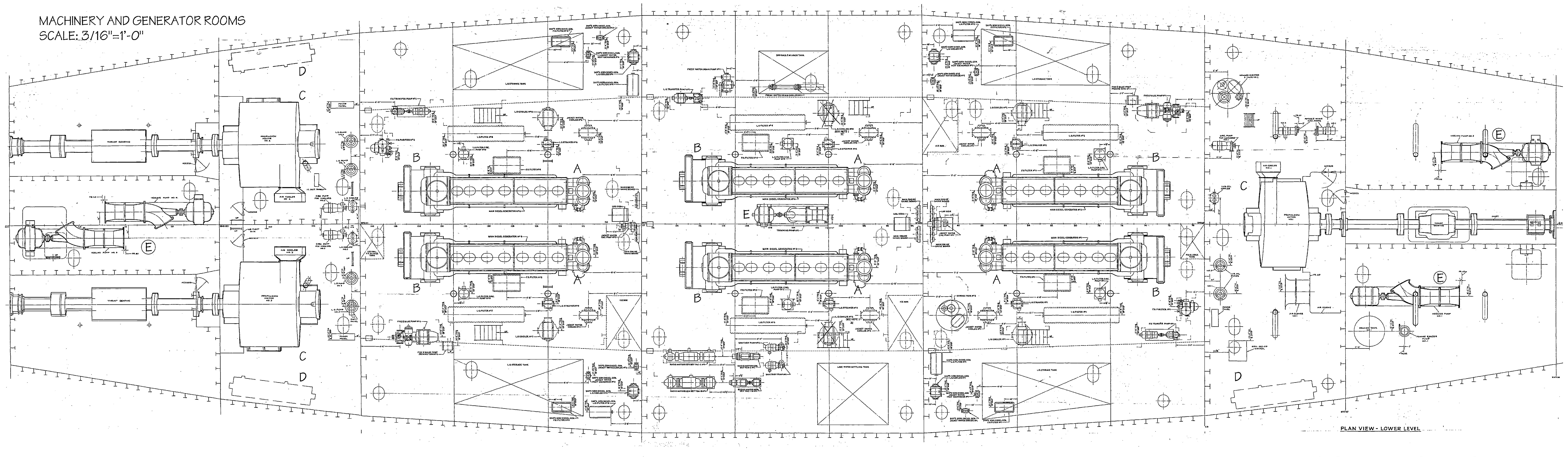
MACHINERY AND GENERATOR ROOMS
SCALE: 3/16"=1'-0"

TRIM AND HEEL PUMPS:

NOTICE LOCATION OF HEEL AND TRIM PUMPS (E) IN PLAN. SEE SHEET #10 FOR MORE INFORMATION ON THIS SYSTEM.

NOTE: SCANS FROM ORIGINAL 1943 CONSTRUCTION PLANS BY THE USCG

POWER AND PROPULTION SYSTEMS:

THE MACKINAW IS POWERED THROUGH A DIESEL-ELECTRIC SYSTEM. THE CORE POWER SUPPLY IS GENERATED FROM THE SIX FAIRBANKS-MORSE, 10 CYLINDER, OPPOSED-PISTON, DIESEL ENGINES; TWO EACH ARE LOCATED PER MACHINE ROOM. THE ENGINE WAS ORIGINALY DESIGNED FOR LOCOMOTIVE FUNCTIONS RESULTING IN THEIR NARROW AND TALL CONFIGUARTION. THE 2000 HP OF DIESEL MUSCLE IS TRANSFORMED INTO DC ELECTRIC ENERGY VIA THE WESTINGHOUSE GENERATOR ATTACHED TO THE END OF EACH ENGINE. THE GENERATOR CREATES 900 VOLTS AND 1530 AMPS OF DC ELECTRICITY. THE ELECTRIC CURRENT POWERS THE WESTINGHOUSE PROPULSION MOTORS WHICH ARE ATTACHED TO THE PROPELLOR SHAFTS. THE MOTOR'S MAGNETIC FIELD IS ESTABLISHED BY THE EXCITOR ENGINES. THE TWO AFT MOTORS GENERATE 5000 HP AND TURN THE PROPELLORS UP TO 136 RPM WHILE THE SMALLER BOW MOTOR SPINS THE SHAFT UP TO 175 RPM WHILE GENERATING 3300 HP; THE DIRECT DRIVE EFFECT MEANS THAT THE SHAFT SPINS AT THE SAME RATE AS THE MOTOR TURNS. THE SOLID STEEL PROPELLOR ARE 14 FT IN DIAMETER AT THE AFT AND 12 FT AT THE BOW.

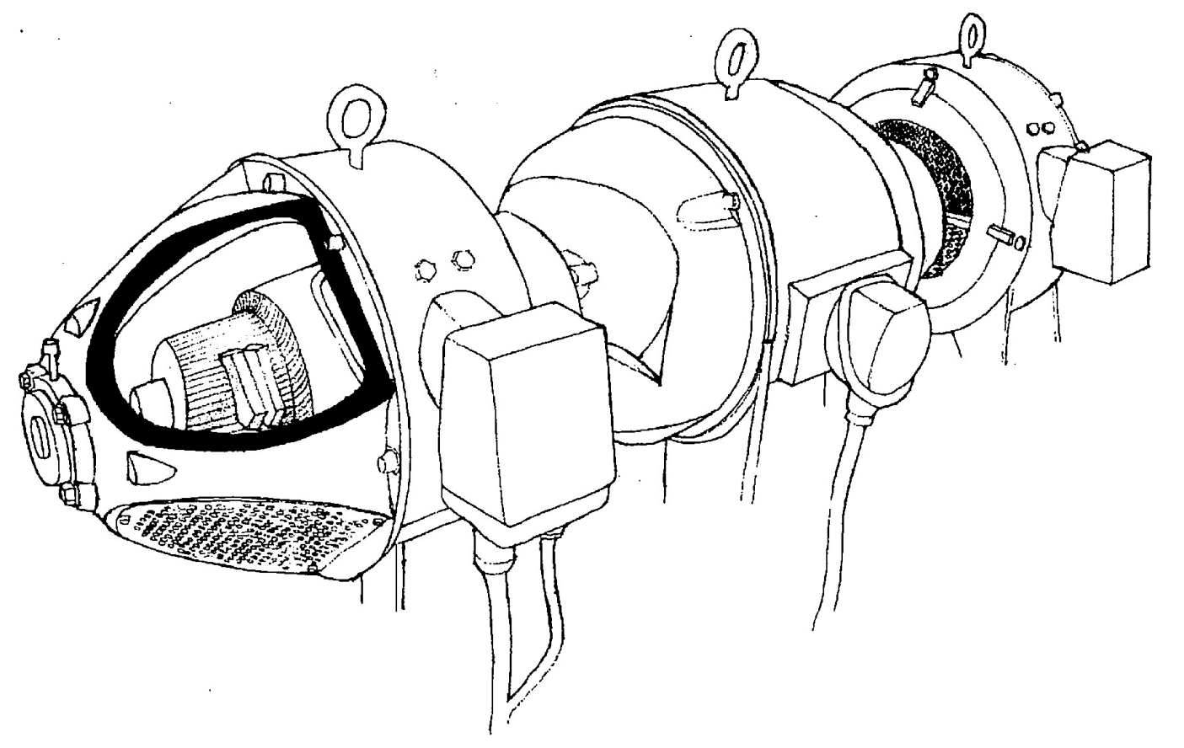

D) EXCITOR ENGINE

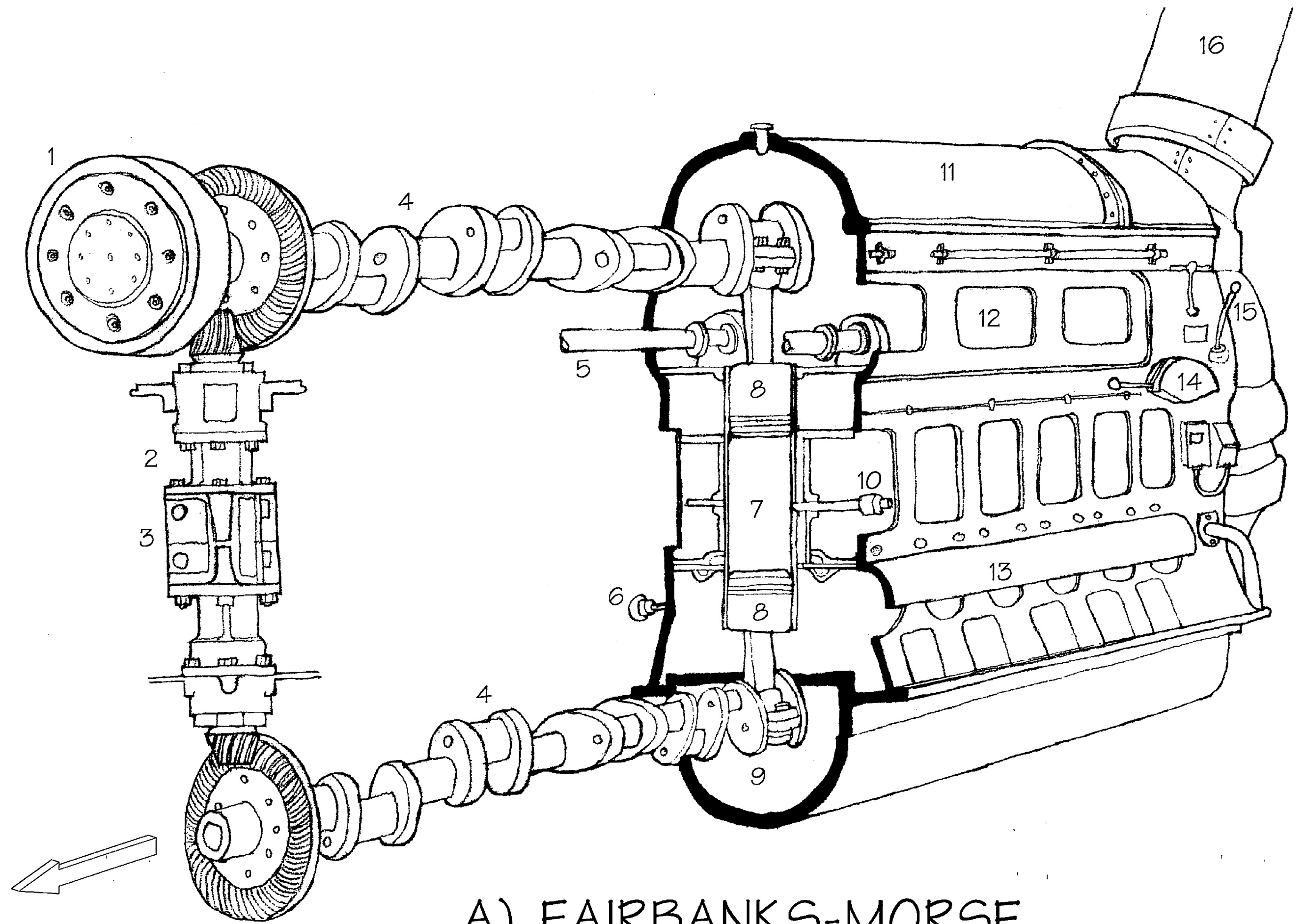

A) FAIRBANKS-MORSE OPPOSED-PISTON DIESEL ENGINE

1. BLOWER DRIVE GEAR
2. VERTICAL DRIVE
3. SPRING PACK
4. CRANKSHAFT
5. CAMSHAFT
6. PYROMETER
7. CYLINDER LINER
8. OPPOSED PISTON
9. OIL SUMP
10. BLOW DOWN
11. COFFIN COVER
12. INTAKE MANIFOLD
13. EXHAUSE MANIFOLD
14. STARTING LEVER
15. FUEL RESET LEVER
16. EXHAUST

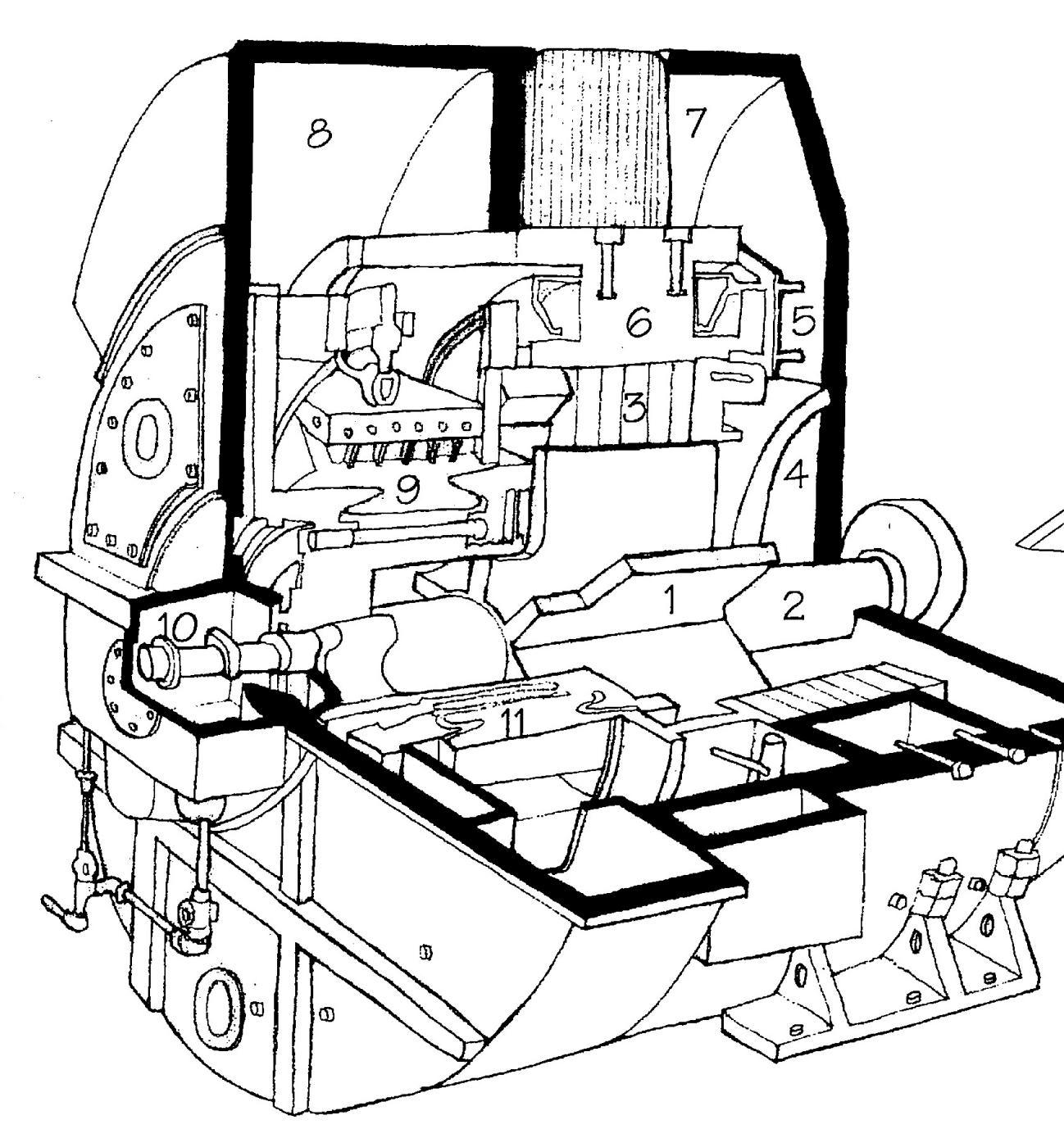

B) WESTINGHOUSE GENERATOR

1. ARMATURE SPIDER
2. ARMATURE SHAFT
3. ARMATURE CORE
4. ARMATURE WINDING
5. COMPENSATING WINDING
6. MAIN POLE LAMINATIONS
7. COOLER CORES
8. AIR DUCT
9. BRUSH HOLDER ASSEMBLY
10. SLEEVE BEARING
11. COMMUTATOR SEGMENTS

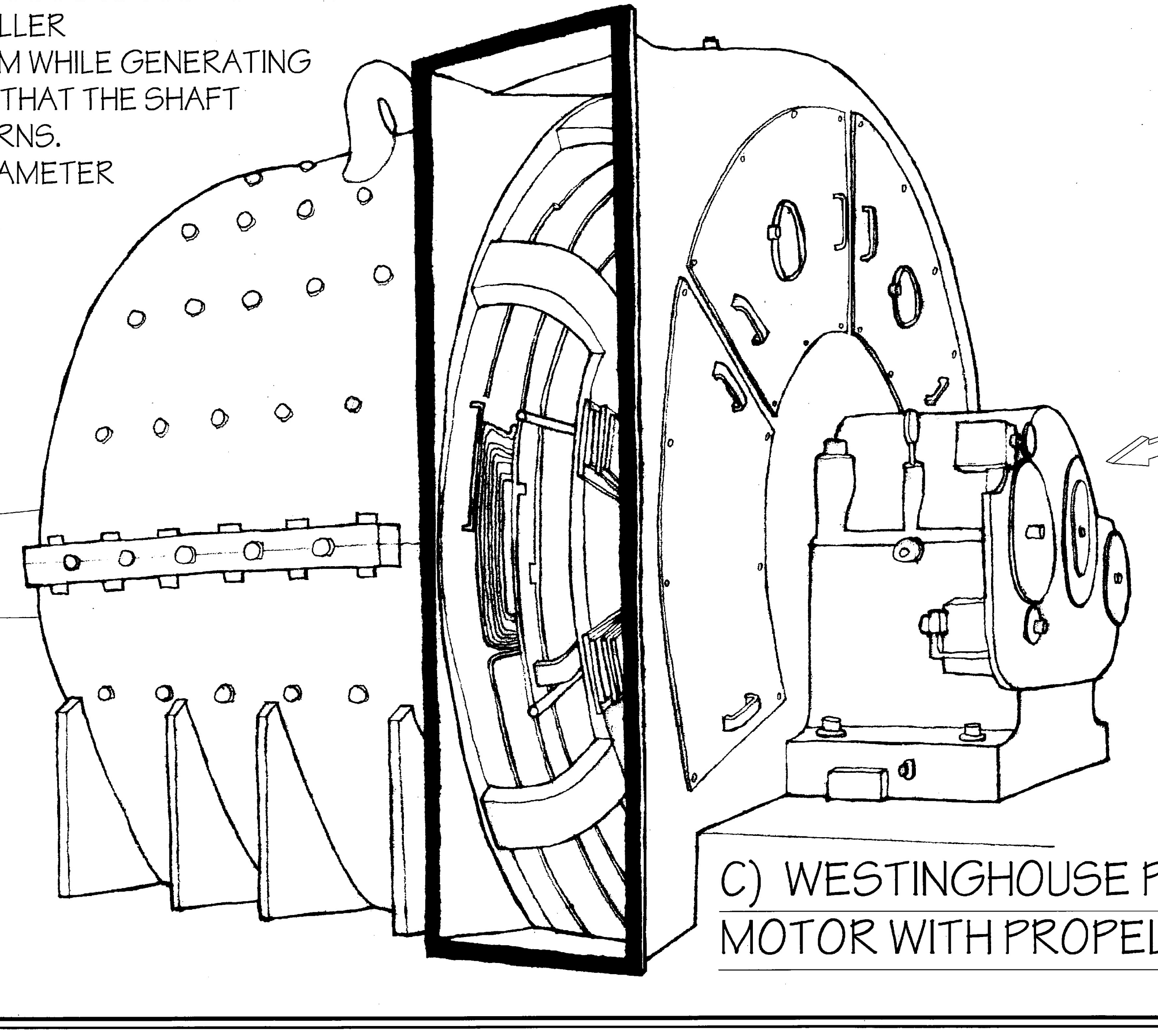

C) WESTINGHOUSE PROPULSION MOTOR WITH PROPELLOR SHAFT

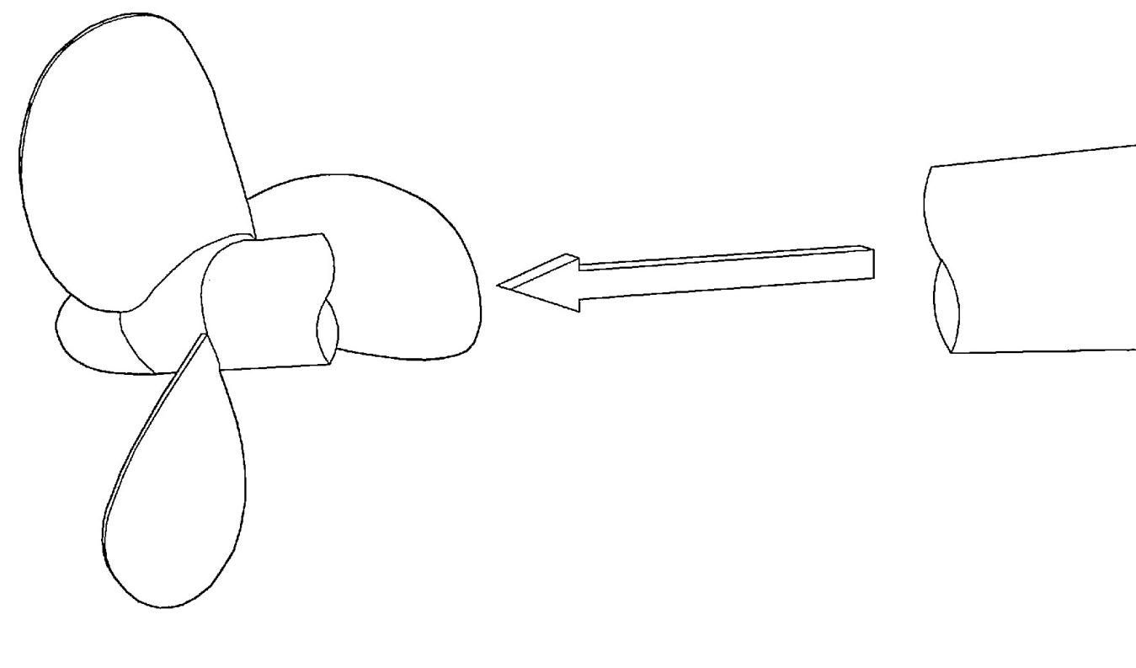

PROPELLOR WITH SHAFT

DELINEATED BY: GREGOIRE HOLEYMAN

HAER MARITIME
RECORDING PROGRAM
NATIONAL PARK SERVICE
UNITED STATES DEPARTMENT OF THE INTERIOR

CHEBOYGAN

MACKINAW (WAGB 83)
632 COAST GUARD DRIVE
CHEBOYGAN COUNTY

MICHIGAN

SHEET
9 OF 11

HISTORIC AMERICAN ENGINEERING RECORD
MI-121

LIBRARY OF CONGRESS INDEX NUMBER

IF REPRODUCED, PLEASE CREDIT THE HISTORIC AMERICAN ENGINEERING RECORD, NATIONAL PARK SERVICE, NAME OF DELINEATOR, DATE OF DRAWING

HEELING AND TRIM SYSTEM

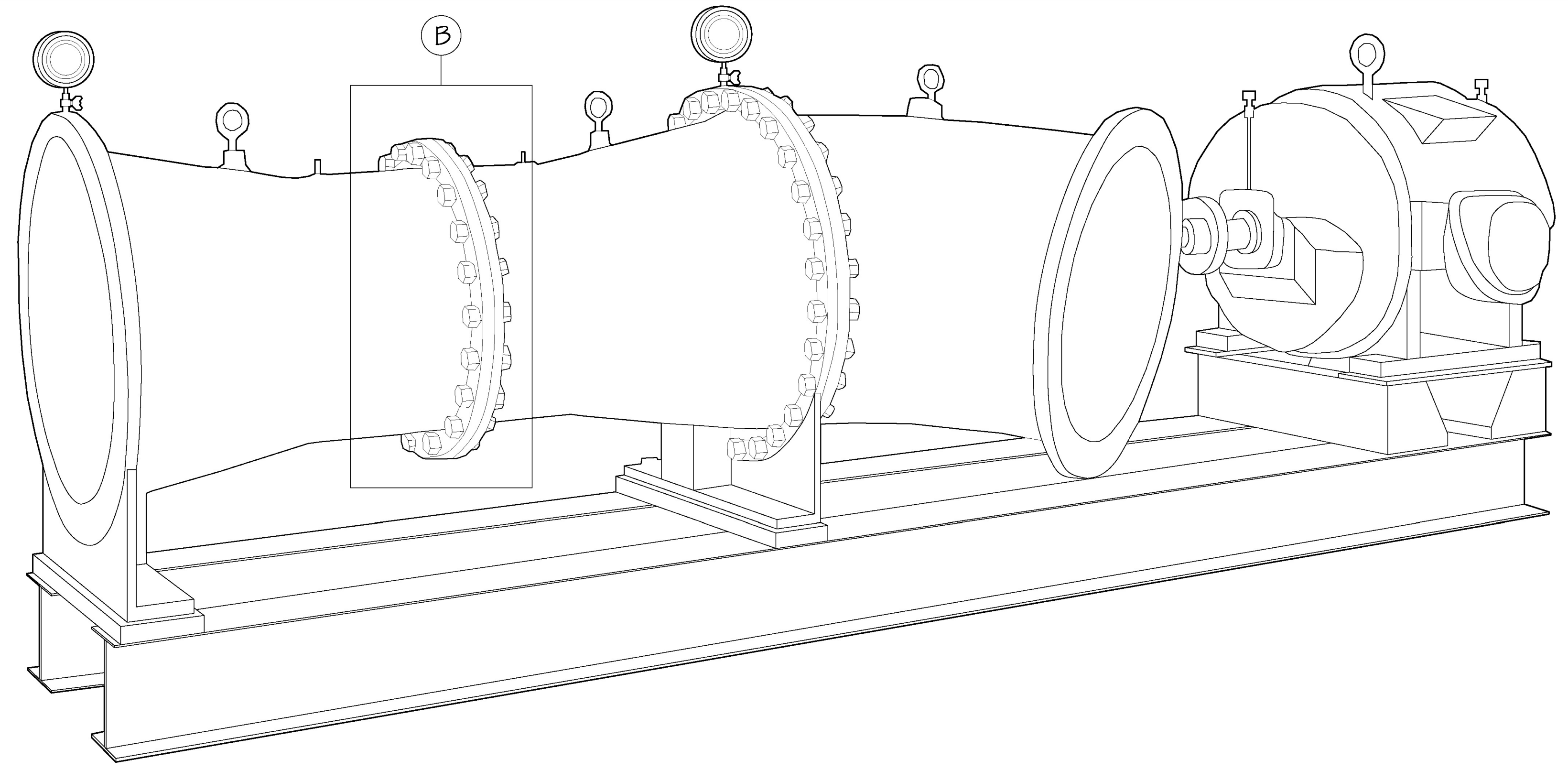

DETAIL A HEELING AND TRIMMING PUMPS:

REVERSIBLE PROPELLOR PUMP

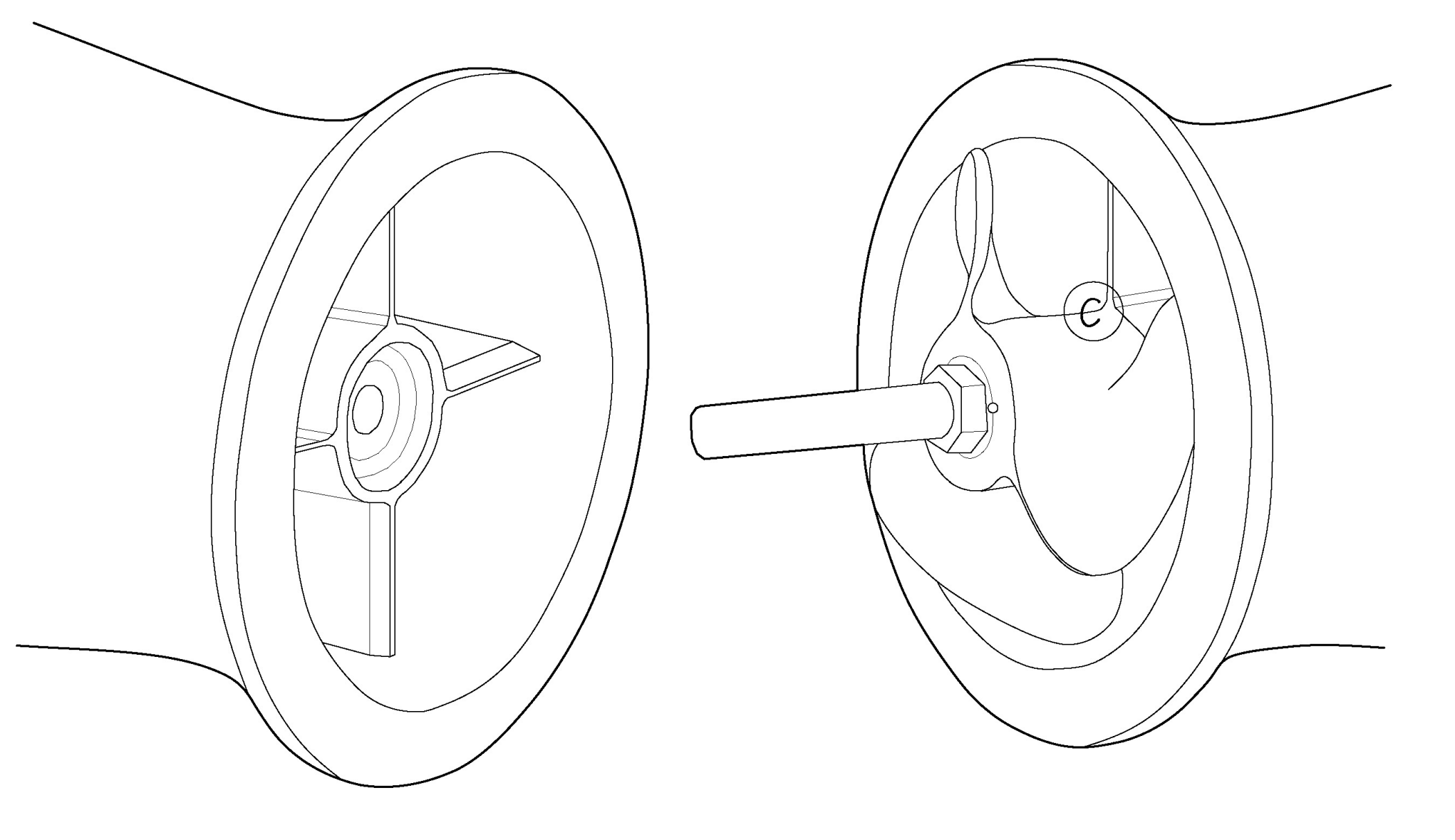

DETAIL B PROPELLOR IN PIPE ASSEMBLY:

OUTER DIFFUSER HAS BEEN REMOVED

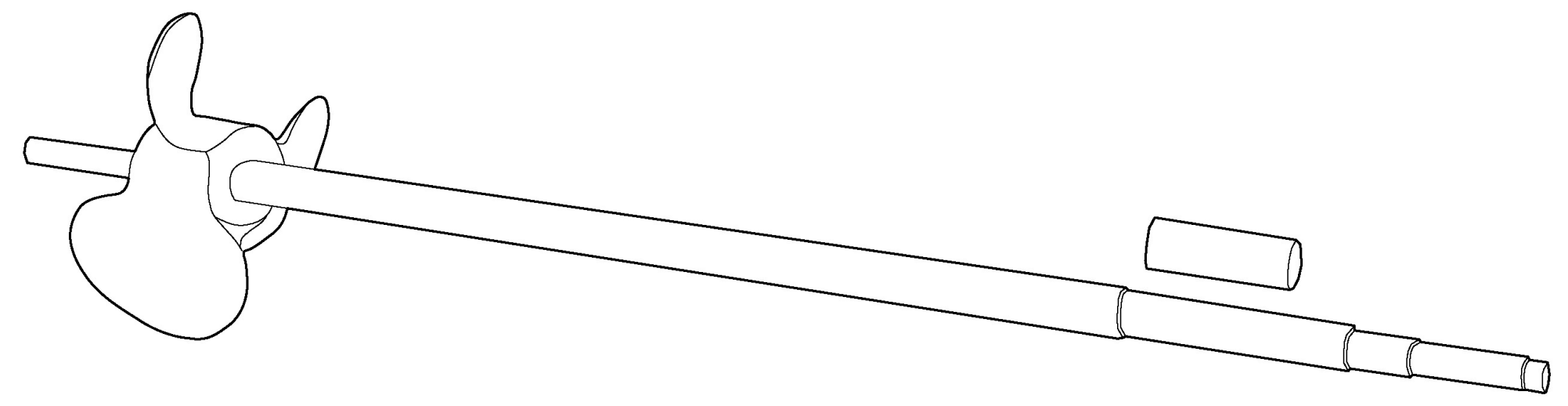

DETAIL C PROPELLOR ON SHAFT:

SHAFT SLEEVE HAS BEEN REMOVED. SHAFT IS ATTACHED TO WESTINGHOUSE MOTOR.

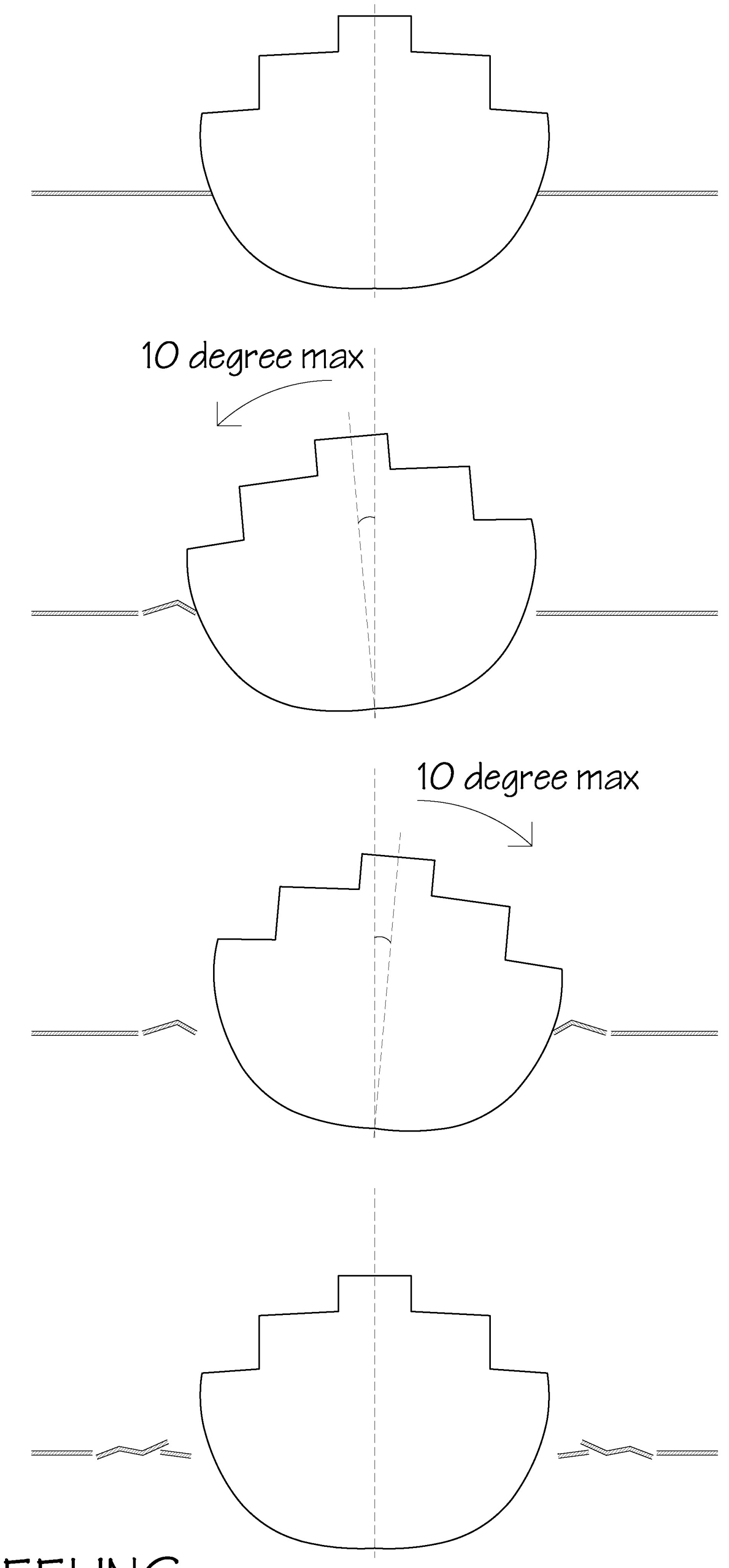

HEELING:

THE MAKINAW'S WIDE BREADTH ALLOWS FOR EVEN A SMALL FIVE DEGREE ROLL TO CLEAR A LOT OF ICE AT THE SIDES OF THE HULL. THE HEELING MANUEVER IS USUALY PERFORMED AFTER A NIGHT'S REST DURING THE ICE BREAKING SEASON. STUCK IN ICE OVERNIGHT, THE MACK HAS TO FREE HERSELF TO BEGIN ANOTHER DAY OF ICE BREAKING.

SALVAGE PIPE:

Removed sometime in the 1950's, the salvage pipe served a couple of functions. If another ship needed ballast (a1), the MACKINAW could transfer some of its water from the trim and heel tanks through the trim pump and some type of connection to the other ship (a2). This could also be reversed if the mack needed extra ballast herself. Another functon of the salvage pipe was to resurface the MACKINAW if she ever sunk (b1). A rescue ship could pump air into the trim and heel tanks (the air would force out the water through the escape valves). Theoreticaly, the air in the tanks would raise the sunken MACKINAW to the surface (b2).

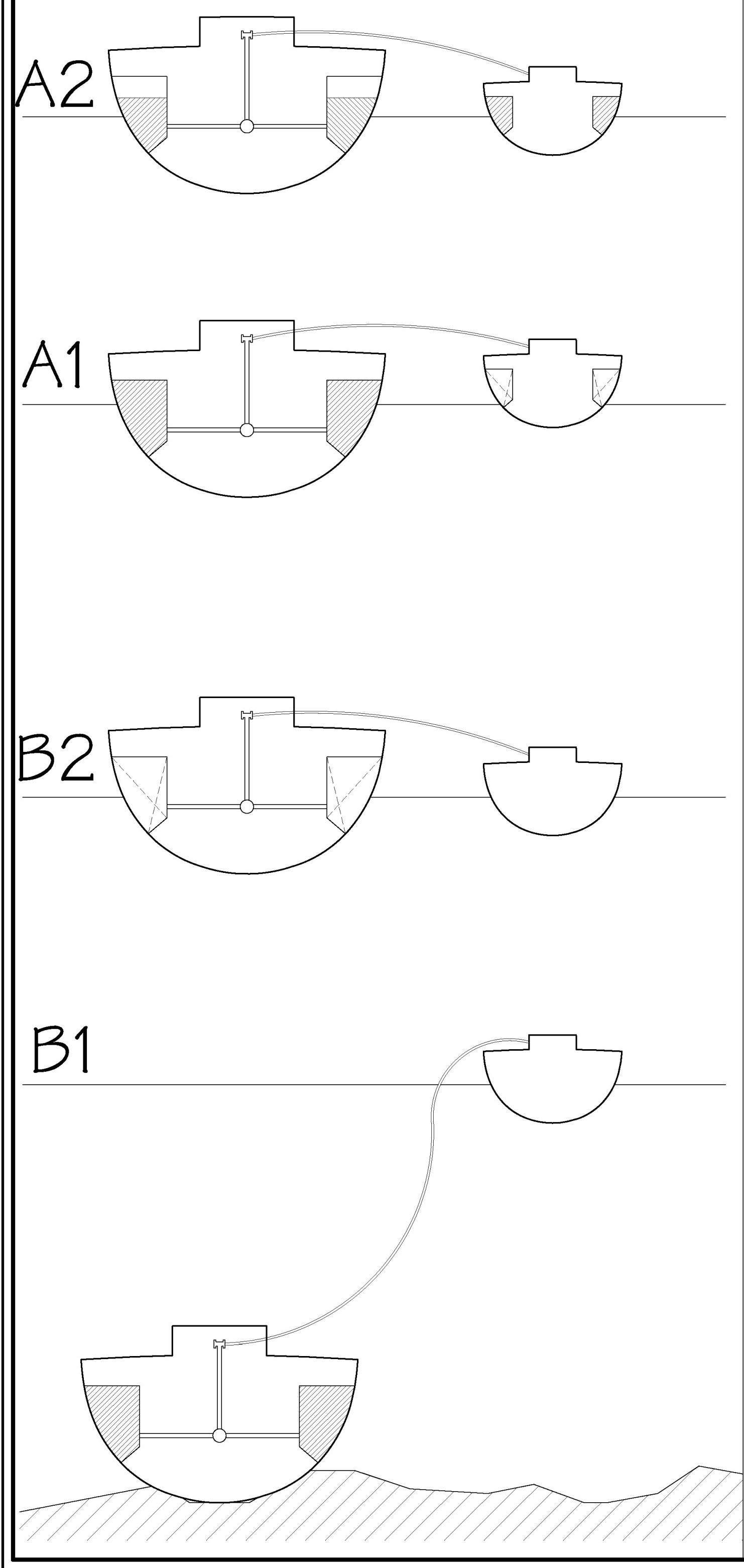

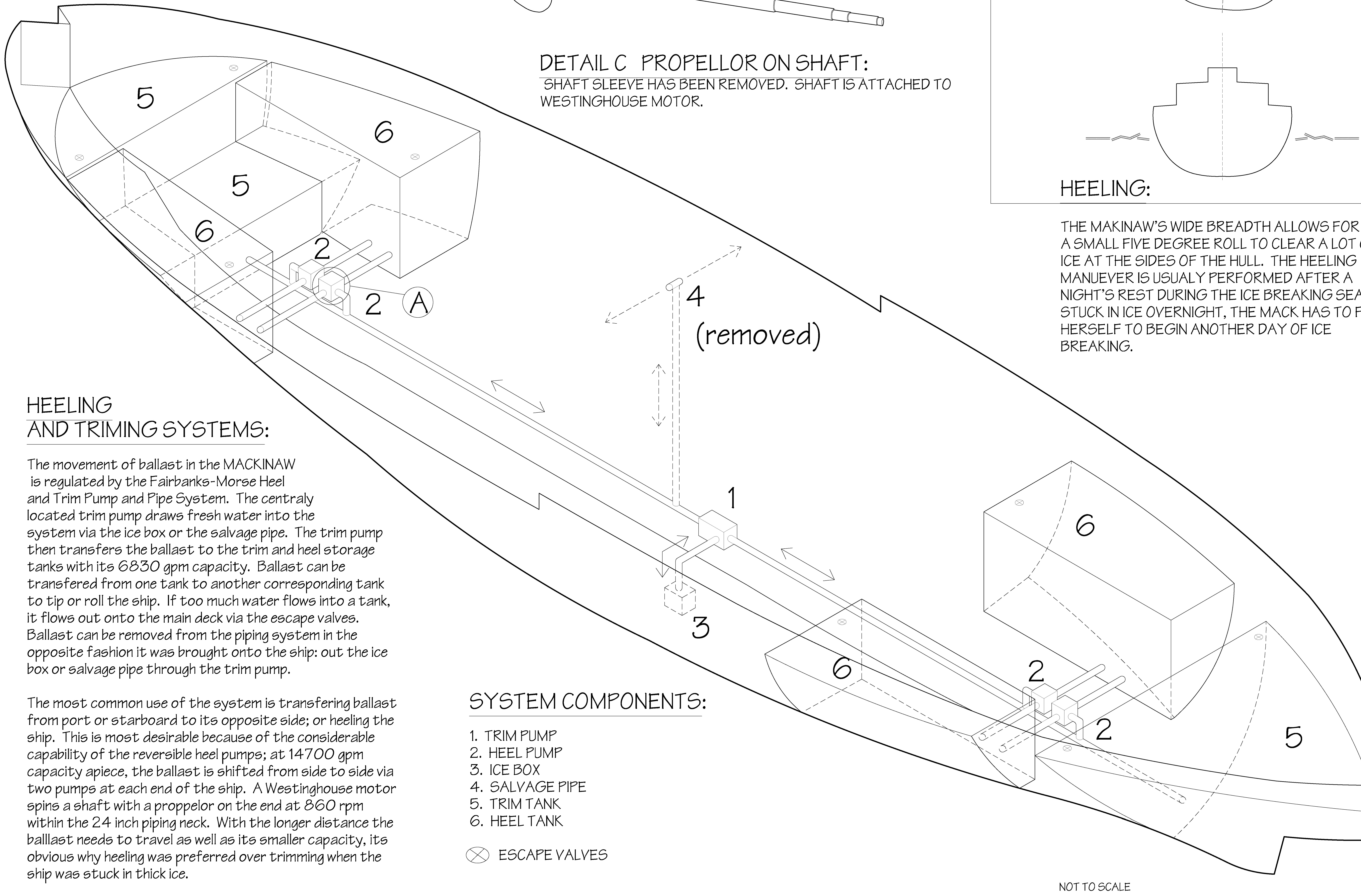

HEELING AND TRIMING SYSTEMS:

The movement of ballast in the MACKINAW is regulated by the Fairbanks-Morse Heel and Trim Pump and Pipe System. The centraly located trim pump draws fresh water into the system via the ice box or the salvage pipe. The trim pump then transfers the ballast to the trim and heel storage tanks with its 6830 gpm capacity. Ballast can be transfered from one tank to another corresponding tank to tip or roll the ship. If too much water flows into a tank, it flows out onto the main deck via the escape valves. Ballast can be removed from the piping system in the opposite fashion it was brought onto the ship: out the ice box or salvage pipe through the trim pump.

The most common use of the system is transfering ballast from port or starboard to its opposite side; or heeling the ship. This is most desirable because of the considerable capability of the reversible heel pumps; at 14700 gpm capacity apiece, the ballast is shifted from side to side via two pumps at each end of the ship. A Westinghouse motor spins a shaft with a proppelor on the end at 860 rpm within the 24 inch piping neck. With the longer distance the balllast needs to travel as well as its smaller capacity, its obvious why heeling was preferred over trimming when the ship was stuck in thick ice.

SYSTEM COMPONENTS:

1. TRIM PUMP
2. HEEL PUMP
3. ICE BOX
4. SALVAGE PIPE
5. TRIM TANK
6. HEEL TANK

⊗ ESCAPE VALVES

NOT TO SCALE

DELINEATED BY: GREGOIRE HOLEYMAN

HAER MARITIME
RECORDING PROGRAM
NATIONAL PARK SERVICE
UNITED STATES DEPARTMENT OF THE INTERIOR

CHEBOYGAN

MACKINAW (WAGB 83)
632 COAST GUARD DRIVE
CHEBOYGAN COUNTY

MICHIGAN

SHEET
10 OF 11

HISTORIC AMERICAN
ENGINEERING RECORD
MI-121

LIBRARY OF CONGRESS
INDEX NUMBER

FUNCTIONAL CHARACTERISTICS

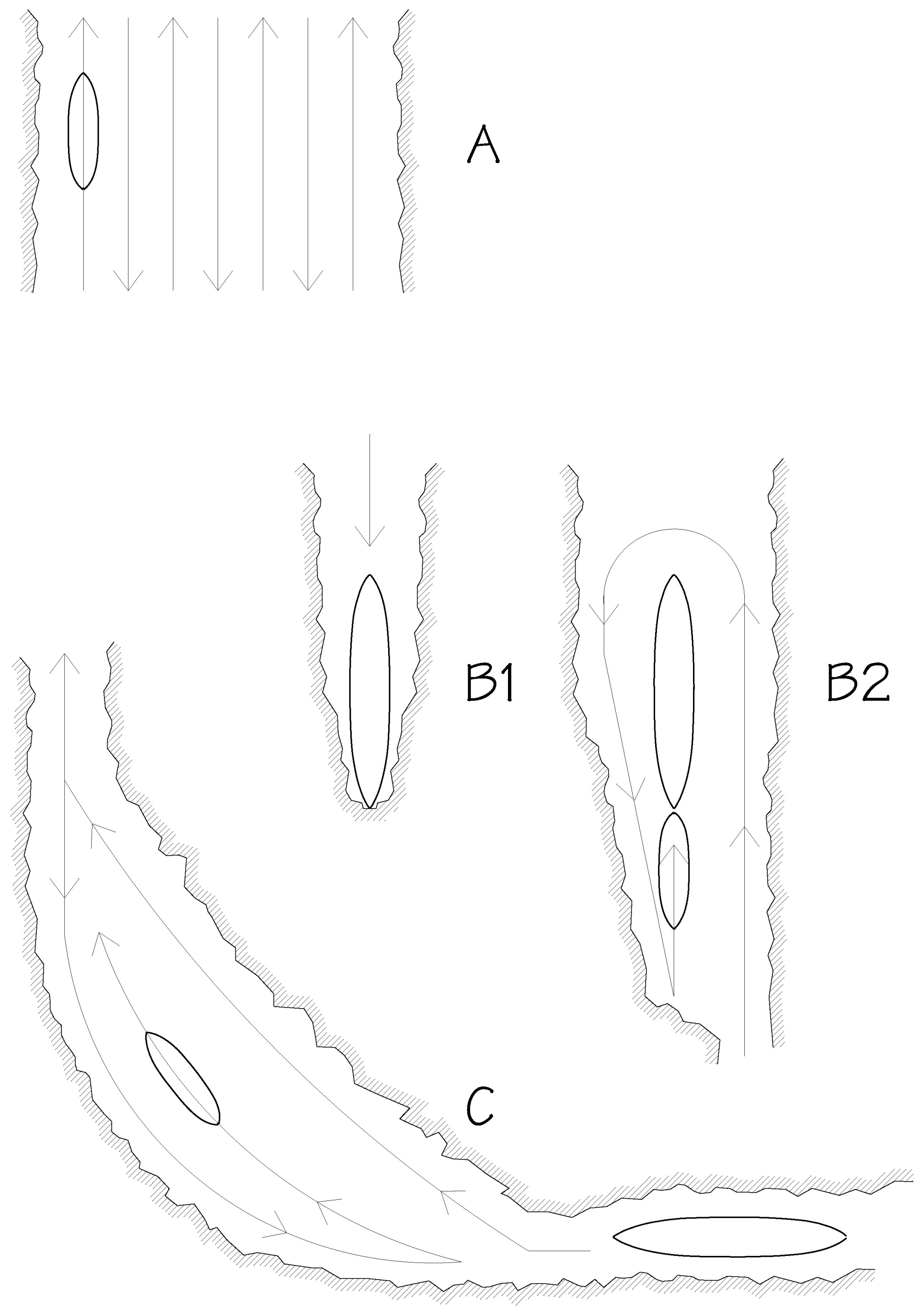

ICE BREAKING MANUEVERS:

THE SHIPPING CORRIDORS ARE KEPT RUNNING DURING THE ICE SEASON THROUGH DIFFERENT TECHNIQUES.

A) A "SUPERHIGHWAY" IS CREATED BY HAVING THE MACKINAW CLEAR A WIDE PATH THROUGH THE ICE FIELDS.

B) WHEN A LAKER IS STUCK IN ICE (B1), THE MACKINAW PERFORMS THE "CRAB WALK" TO FREE THE SHIP. THE MACKINAW CIRCLES THE SHIP, CLEARING THE SURROUNDING ICE, AND SLOWLY BACKS INTO THE BOW OF THE TRAPPED CARRIER WHILE IN FULL THROTLE, CAUSING PROP WASH TO PASS ALONG THE SIDES OF THE CARRIER AND PUSHES AWAY ANY STUCK ICE (B2). DURING THIS MANUEVER, THE BOUNCE-CUSHION EFFECT OF THE SOLID ICE CAUSES THE MACK TO BACK UP IN A CRAB WALK FASHION. ONCE THE MACK IS IN POSITION, THE SHIP IS TOWED THE REST OF THE WAY.

C) FOR LONG SHIPS, A WIDE TURNING RADIUS IS CREATED BY FIRST PROCEEDING ALONG THE INSIDE CURVE, THEN BACKING DOWN ALONG THE OUTSIDE CURVE AND FINALY DOWN THE MIDDLE OF THE TURN.

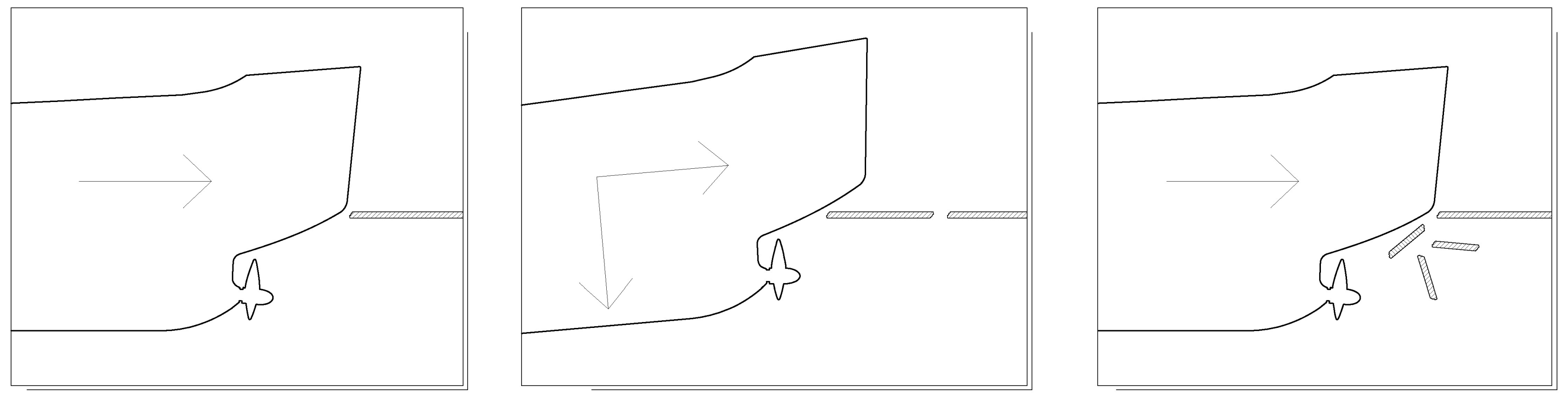

MAIERFORM BOW:

THE SHAPE OF THE BOW LENDS ITSELF TO ICEBREAKING. WITH THE THRUST OF ROARING ENGINES PUSHING THE SHIP INTO THE ICE, THE ANGLED RAKE OF THE BOW IS DESIGNED TO RAISE THE SHIP OVER THE ICE UPON CONTACT. WITH THE ADDED WEIGHT OF FULL TRIM AND HEEL TANKS, THE MACKINAW FALLS AND CRUSHES ANY ICE UNDERNEATH ITS HULL. THIS MOTION IS REPEATED TO CREATE A SEAM IN THE ICE SHELF.

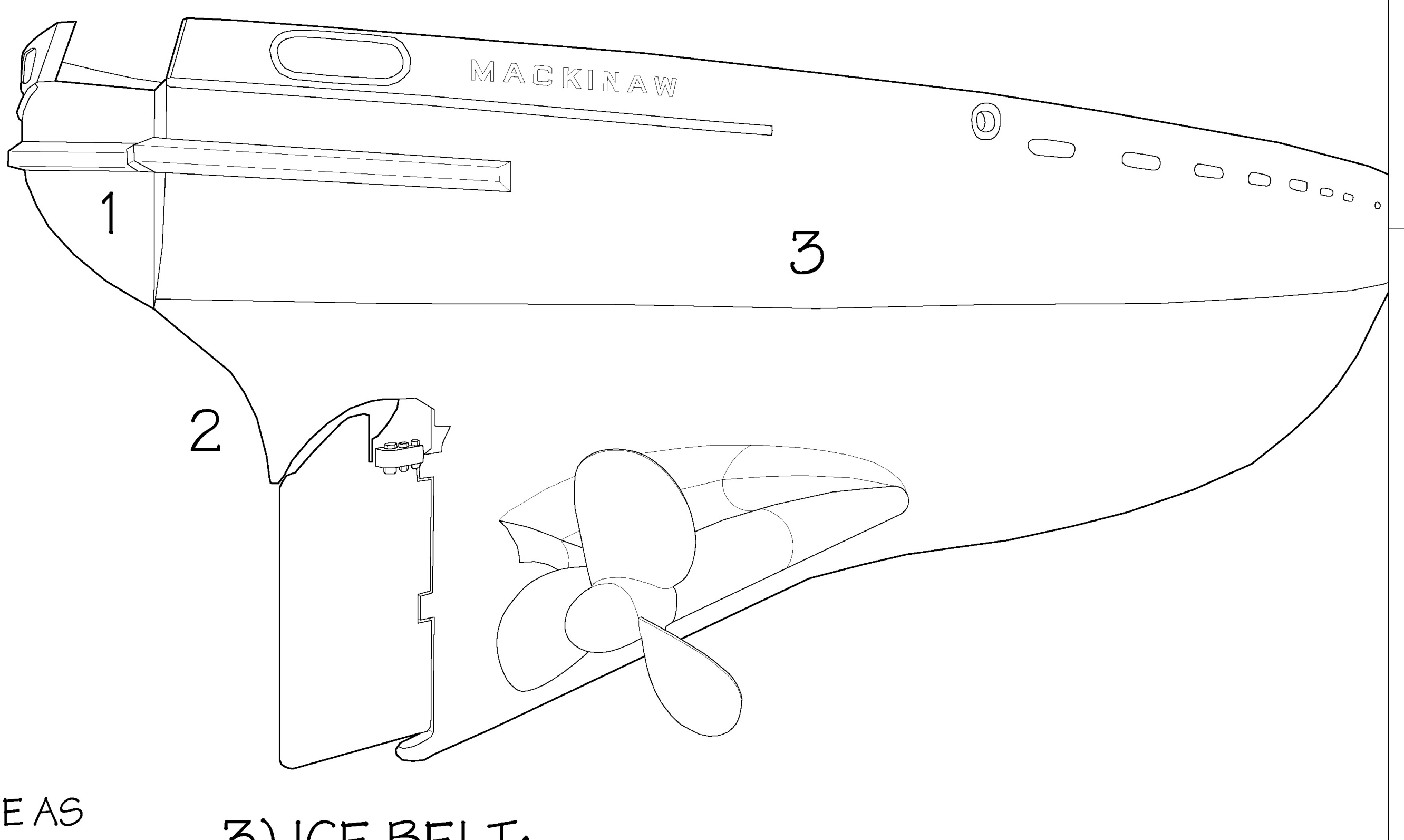

1) V-NOTCH:

THE MACKINAW'S STERN HAS A NOTCH TO ACCOMODATE A TOWED SHIP. THE SHAPE IS INTENDED FOR A CLOSE, BUT COMFORTABLE DISTANCE IN WHICH A SHIP CAN BE SAFELY TOWED.

2) RUDDER HORN:

THE RUDDER HORN DEFLECTS ICE AS THE MACK IS BACKING UP. THE STEEL IS CAST FROM ONE LARGE MOLD AND ITS SHAPE IS EFFECTIVE AT ICE BREAKING WHILE MOVING BACKWARDS.

3) ICE BELT:

THE ICE BELT HELPS TO PROTECT THE SHIP FROM DAMAGE. ALONG THE WATERLINE, THE SHIP IS MADE OF WELDED 1-3/8" THICK HIGH-TENSILE STEEL. BELOW THE WATERLINE, THE HULL IS LAYED WITH 1-5/8" THICK MILD STEEL; BETTER SUITED FOR THE FRIGID WATERS OF THE ICE BREAKING SEASON.

BOW PROPELLOR:

THE MACKINAW'S FOWARD PROPELLOR SERVES A VARIETY OF FUNCTIONS IN THE ICE BREAKING PROCESS. ITS MAIN FUNCTION IS TO REMOVE THE WATER FROM UNDERNEATH THE ICE-SHELF, RENDERING THE ICE SLAB MORE BRITTLE AND EASIER TO BREAK WITH THE SHIP'S HULL. ANOTHER FUNCTION OF THE PROP IS TO REDUCE THE FRICTION OF THE ICE AGAINST THE HULL. THE PROP BREAKS DOWN THE LARGE CHUNKS OF ICE INTO SMALLER PARTICLES AS WELL AS KEEPING THE FLOW OF WATER MOVING AROUND THE EDGES OF THE BOAT.

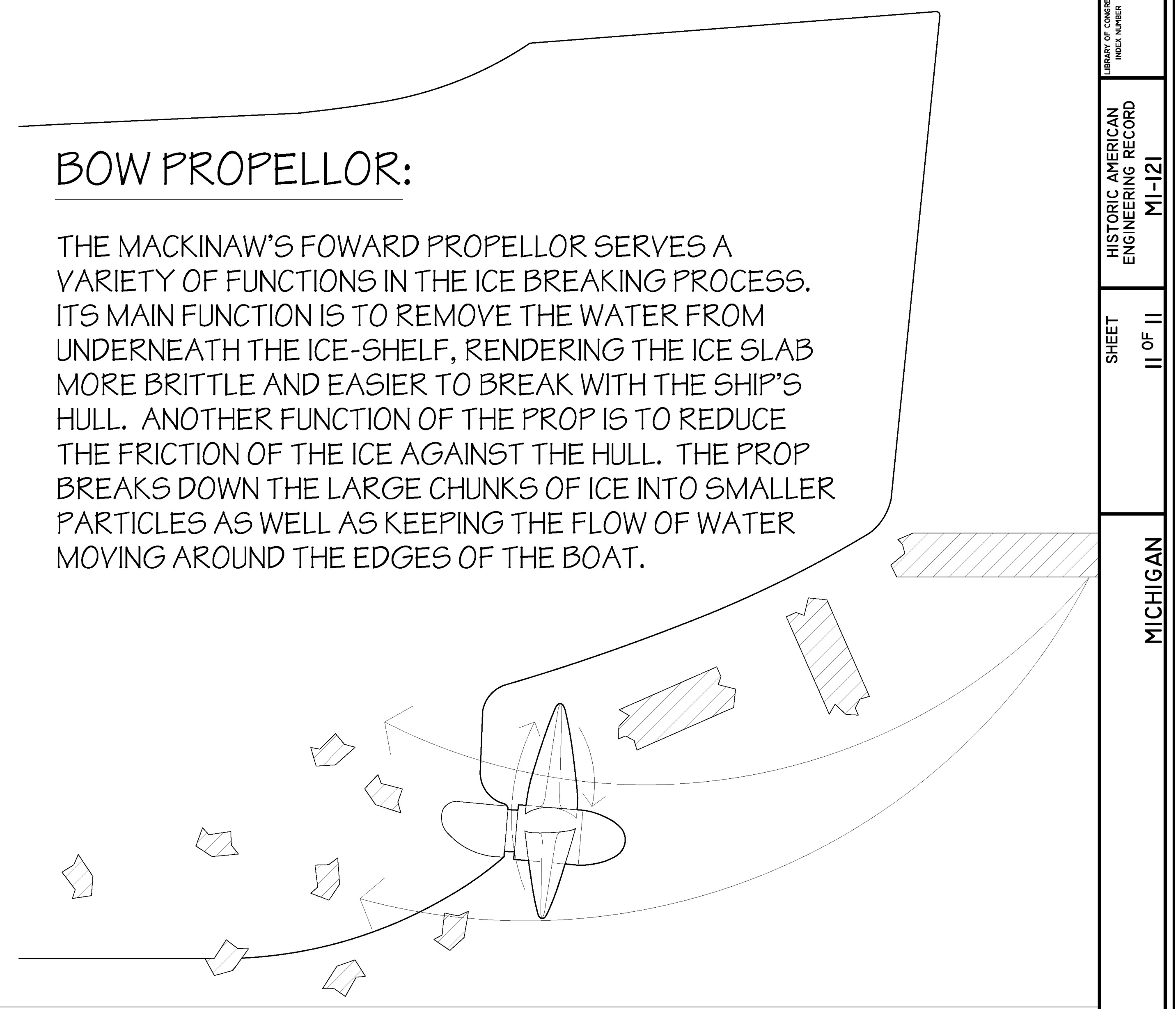

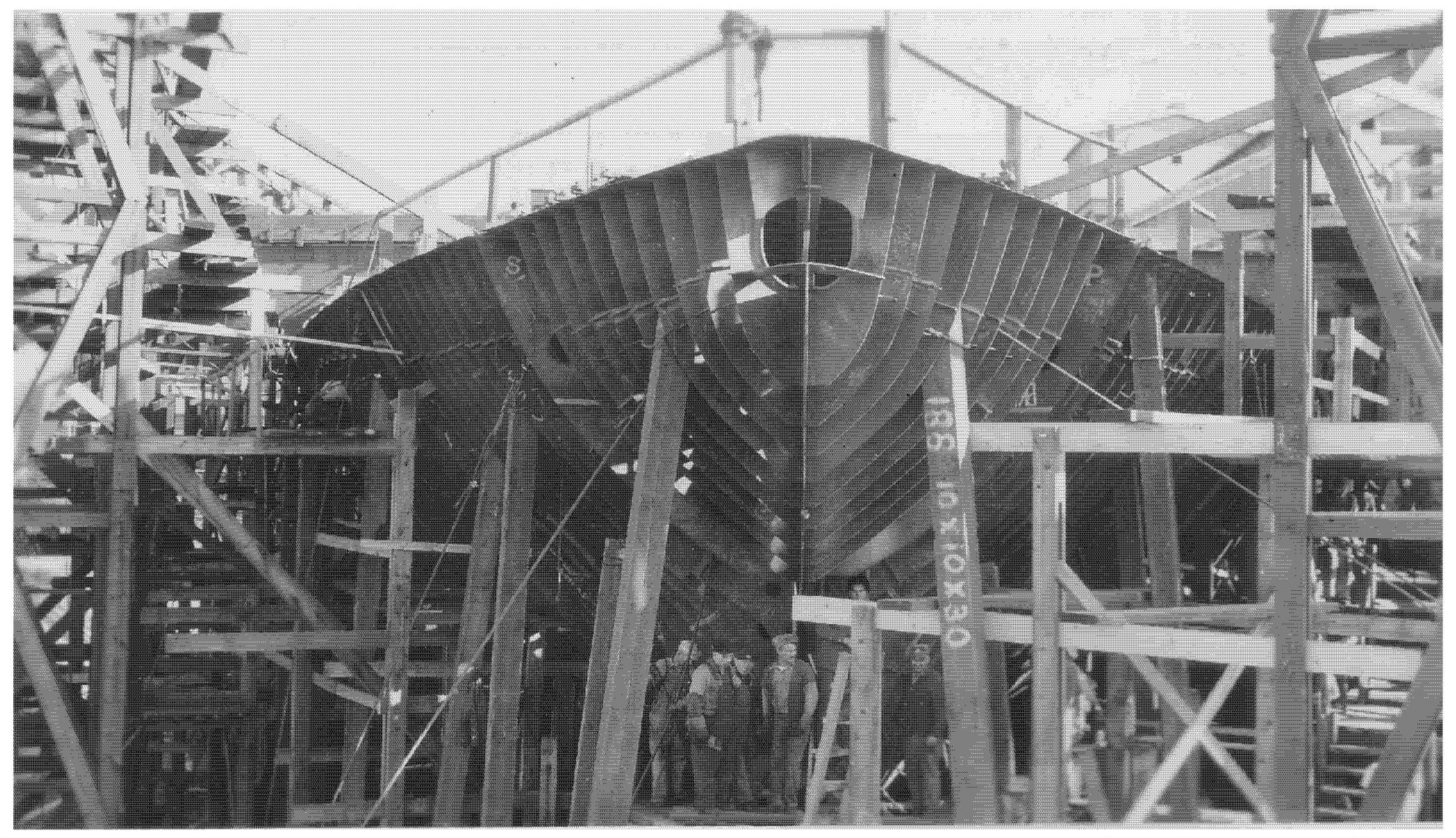

Photo courtesy of USCG Historian's Office

BOW FRAMING:

THE CANTILEVERED STEEL FRAMING OF THE BOW IS REINFORCED BY THE 16 SPACING BETWEEN FRAMES. THE VAST AMOUNT OF STRUCTURAL STEEL HAS BEEN PIVOTAL IN KEEPING THE MACKINAW IN SERVICE FOR OVER 60 YEARS.

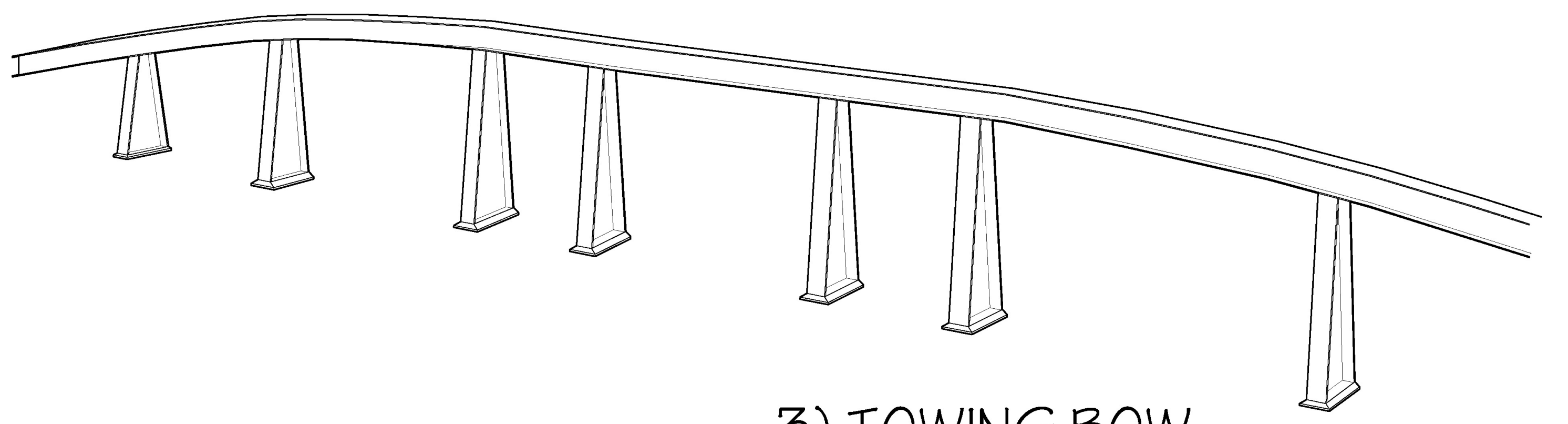

3) TOWING BOW

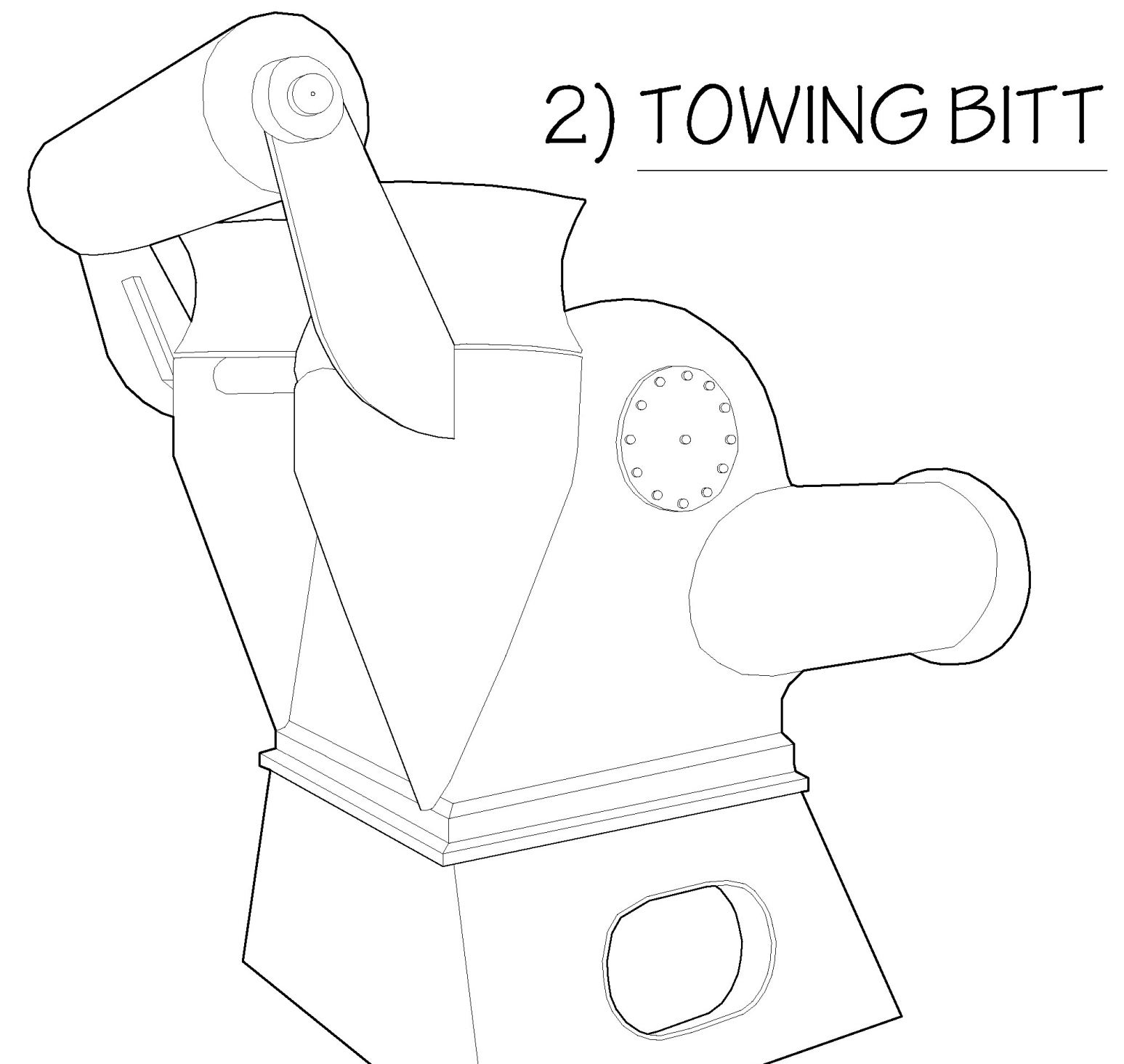

2) TOWING BITT

TOWING:

THE MACKINAW IS EQUIPED WITH HEAVY DUTY TOWING CAPABILITIES. THE ALMAN JOHNSON AUTOMATIC ELECTRIC TOWING MACHINE CAN PULL UP TO 94,000 LBS. THE LINE IS FED THROUGH THE PULLEY OF THE TOWING BIT. ALSO KNOWN AS "THE OLD LADY," THE MULTI-FUNCTIONAL BIT CAN ACCOMODATE DIFFERENT TOWING ARRANGEMENTS AS SHOWN IN LINE ARRANGEMENT "A" FOR TALL SHIPS. THE TOWING BOW KEEPS THE LINE FROM SNAGGING ANY EQUIPMENT ON THE DECK WHEN TOWING SMALLER SHIPS AS SHOWN IN LINE ARRANGEMENT "B."

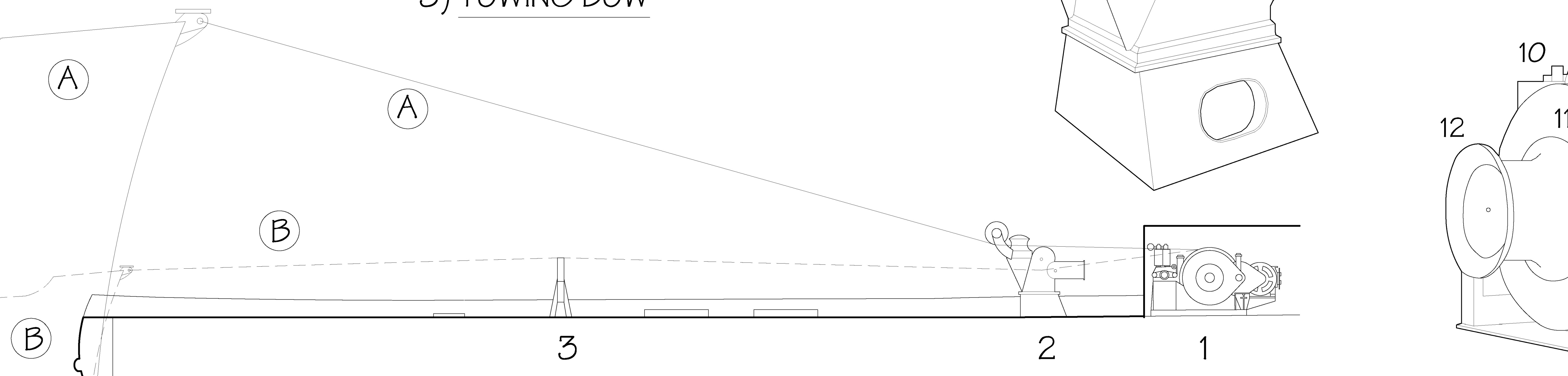

View of ship secured in V-Notch for towing

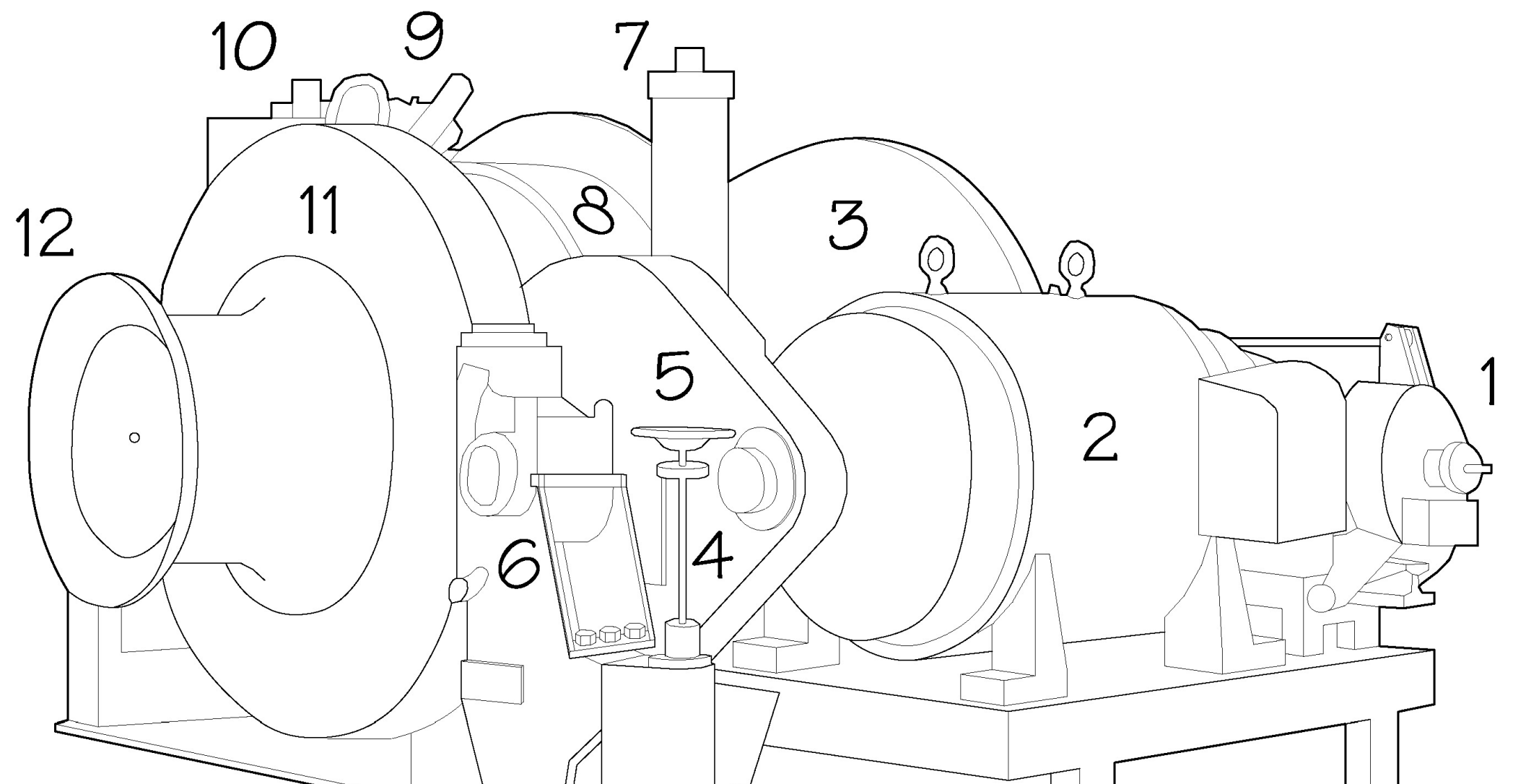

1) ALMAN JOHNSON AUTOMATIC ELECTRIC TOWING MACHINE

1. SOLENOID BRAKE
2. MARINE MOTOR
3. TOWING HAWSER DRUM
4. TENSION ADJUSTER STAND
5. MOTOR GEAR & PINION
6. INTERMEDIATE BEARING STAND
7. VERTICAL SPRING CASE
8. CLUTCH-BRAKE BAND
9. CLUTCH-BRAKE COMPRESSOR
10. VERTICAL SPRING CASE
11. BULL GEAR
12. GYPSY HEAD

DELINEATED BY: GREGOIRE HOLEYMAN

HAER MARITIME
RECORDING PROGRAM
NATIONAL PARK SERVICE
UNITED STATES DEPARTMENT OF THE INTERIOR

CHEBOYGAN

MACKINAW (WAGB 83)
632 COAST GUARD DRIVE
CHEBOYGAN COUNTY

MICHIGAN

SHEET
11 OF 11

HISTORIC AMERICAN
ENGINEERING RECORD
MI-121

LIBRARY OF CONGRESS
INDEX NUMBER